Th02D-4

5.8 GHz band 10 W rectenna with GaAs E-pHEMT gated anode diode on the aluminum nitride antenna for thermal dispersion

N. Sakai, N. Furutani, K. Uchiyama, Y. Hirose,

F. Komatsu, and K. Itoh

Kanazawa Institute of Technology

Outline

- Introduction
- High power and highly efficient rectification technique
  - Gated anode diode (GAD)
  - Diode on the antenna (DoA) topology
- 10 W rectenna with aluminum nitride antenna design
  - Thermal design
  - Antenna admittance design and layout design
- Measurement of the rectification efficiency and junction temperature of the rectifier on the AlN antenna
- Prototyped rectenna array and drone flight demonstration

Introduction

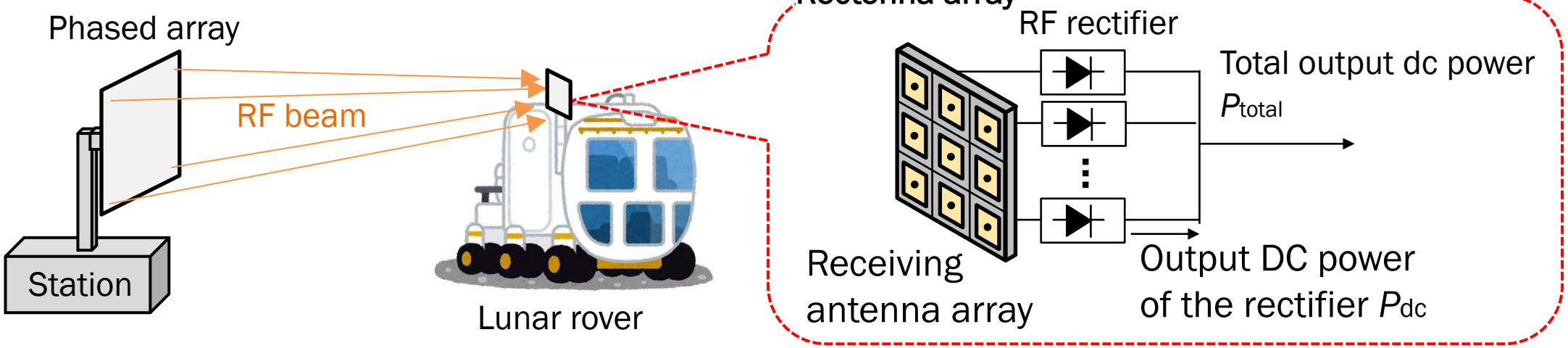

Microwave power transfer system on the lunar surface

Rectenna array's requirement

(1) High output power

(2) Compact size for mounting in a vehicle

Rectenna array's output dc power

$$P_{total} = P_{dc} \times \frac{\text{Rectenna array's area}}{(\text{Distance between antennas})^2}$$

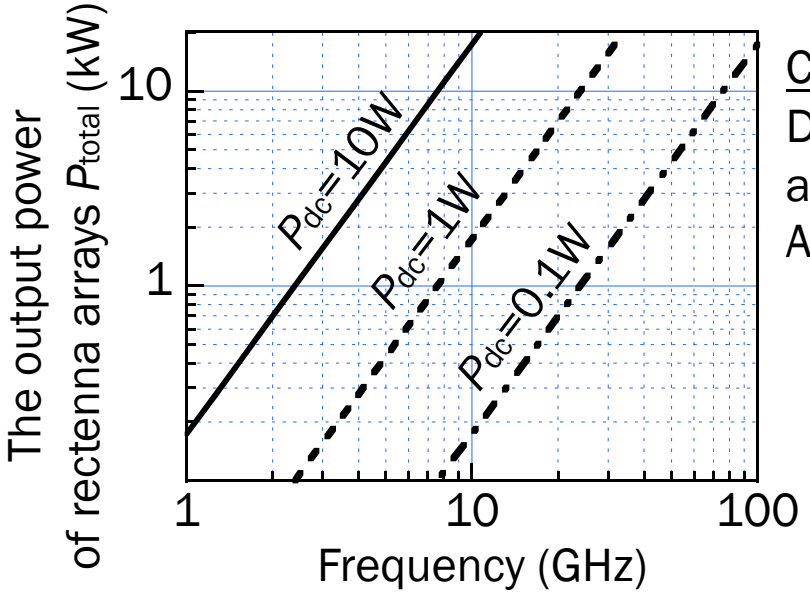

Calculation specification

Distance between antennas: 0.8λ

Area size: 1.0 x 1.0 mm^2

Rectenna's requirement to improve P_{total}

High frequency or high output power

The theoretical output power of rectenna array

Introduction

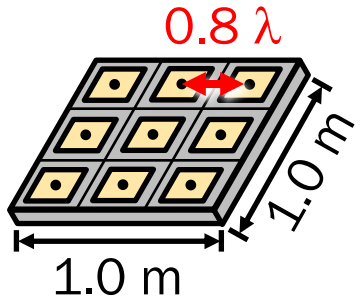

Layout of rectenna array

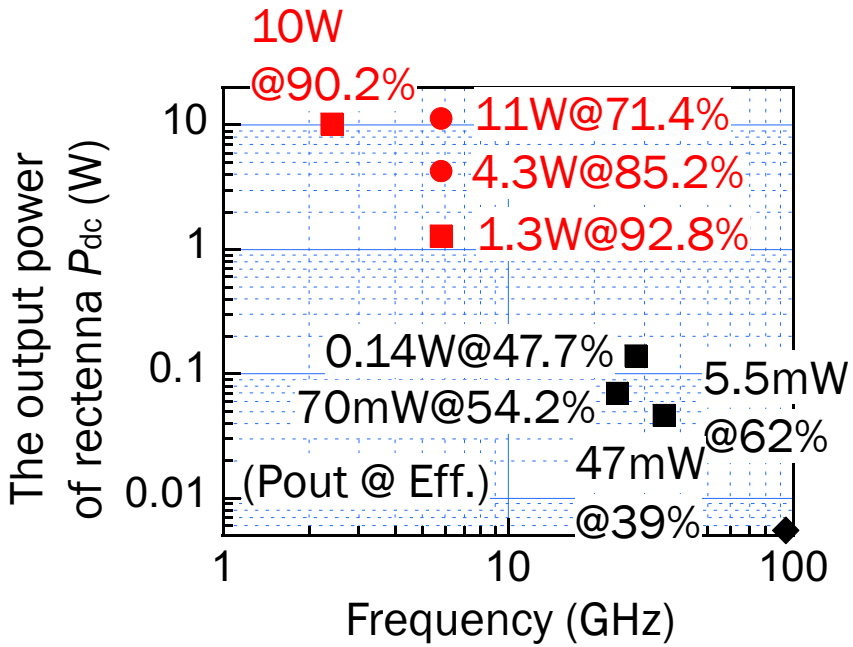

Reported output power of rectennas in past works

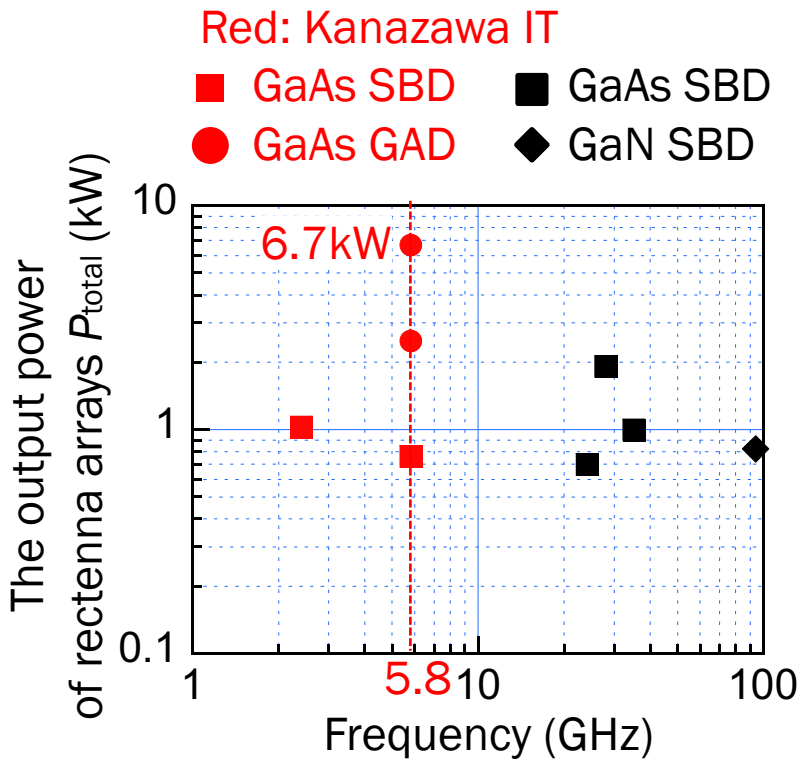

Estimated output power of rectenna arrays in past works

Design and prototype of a high-power and highly efficient 5.8 GHz band rectenna

High power rectification technique (gated anode diode [1])

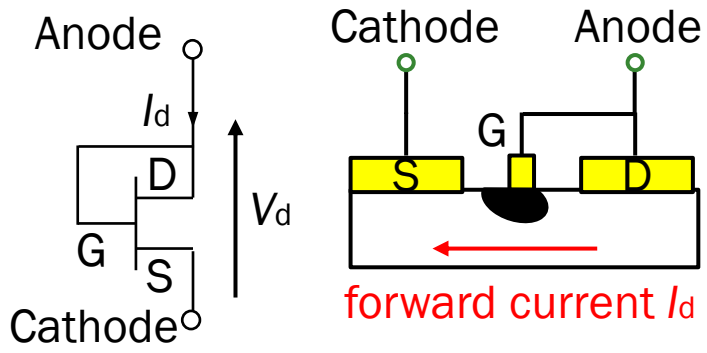

Feature

Utilization of FET's drain current

➔ high forward current

➔ High power rectification

Gated Anode Diode (GAD)

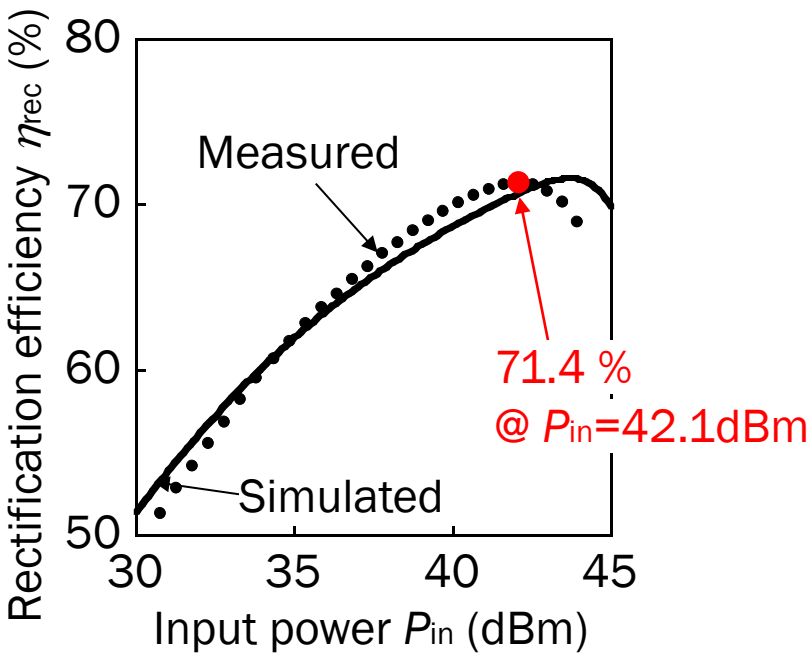

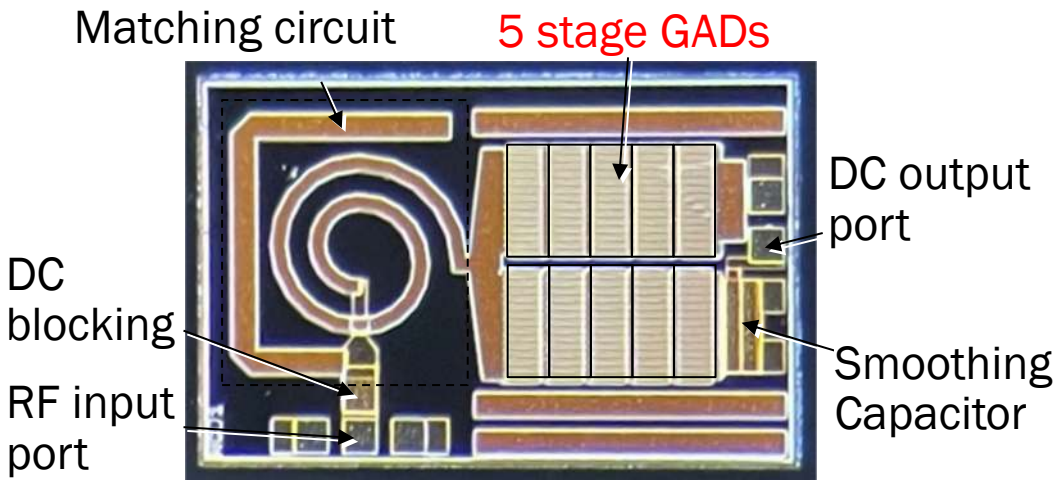

Photograph of 10 W rectifier on GaAs MMIC

High power rectification of 42.1 dBm is achieved at a rectification efficiency of 71.4 %.

➔ the rectification efficiency is not sufficient because of the loss of the matching circuit.

[1] Y. Hirose, N. Sakai, K. Itoh, AWPT 2022, MO-5-04, Dec. 2022.

Highly efficient rectification technique (Diode on antenna (DoA) topology [2])

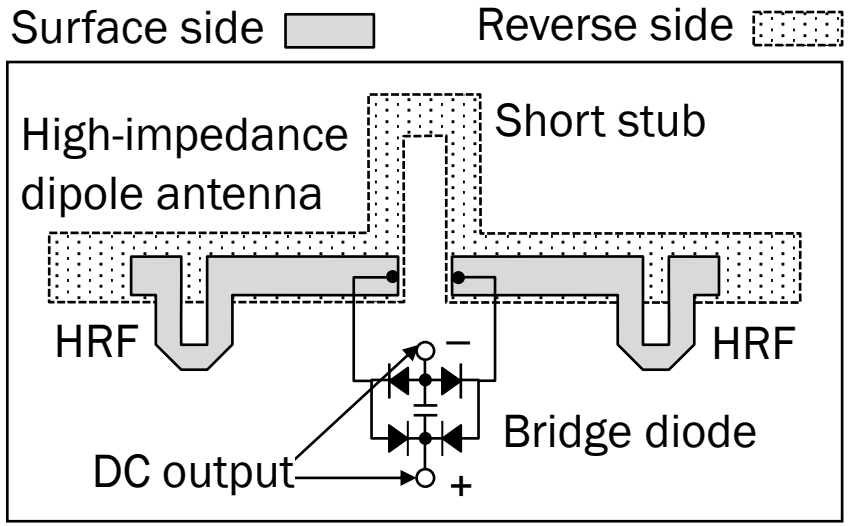

HRF: Harmonic reaction feeder

The rectenna's configuration

The antenna has circuit functionalities

High-impedance dipole: boosting transformer
Short stub: impedance matching
HRF: harmonic reaction and DC blocking

➔ The highly functional antenna is directly connected with the bridge diode (DoA topology).

➔ No circuit loss between the antenna and the bridge diode

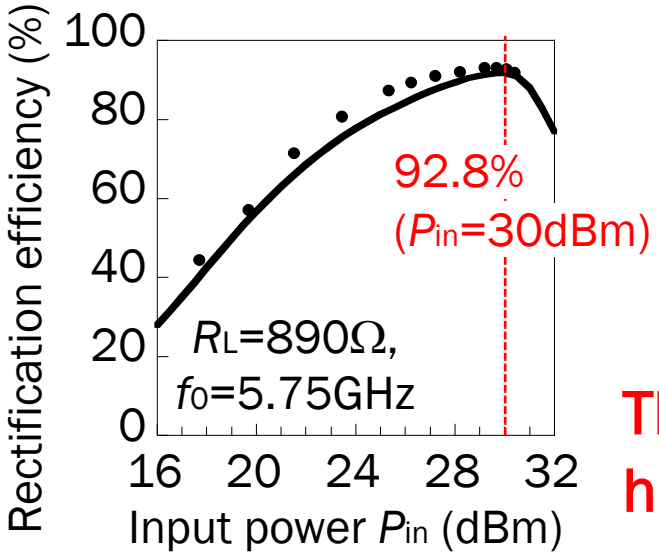

The rectenna with DoA has highly efficient rectification.

[2] K. Itoh, N. Sakai, K. Noguchi, IEICE Trans. on Electronics, vol.E105-C, no.10, pp.483-491, Oct. 2022.

Objective

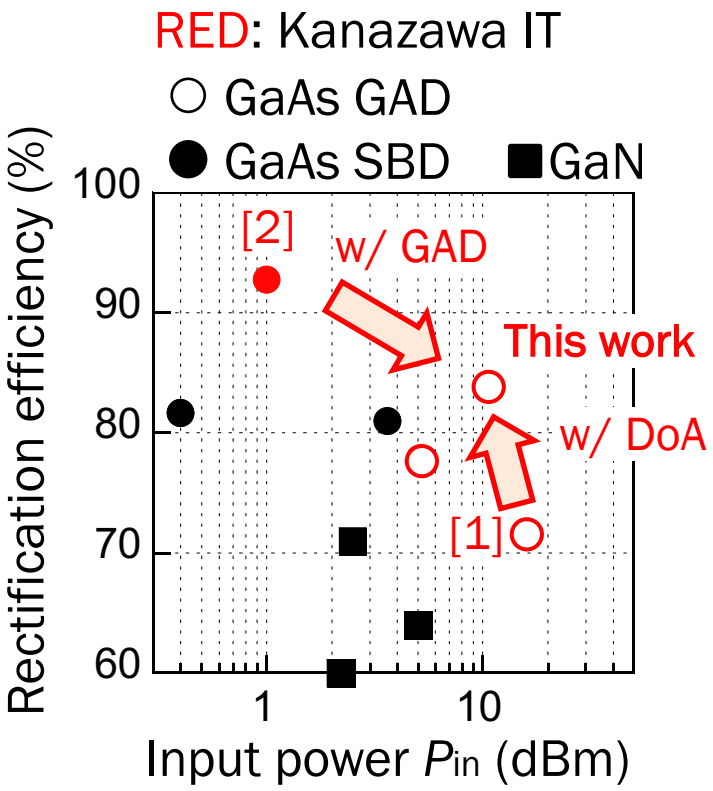

Reported rectification efficiency of rectennas in past works

Design and prototype for 5.8 GHz band high power rectenna array

(1) The high-power rectenna design with GAD and DoA topology

(2) Aluminum nitride (AlN) antenna design for thermal dissipation

(3) The high-power rectenna array prototype and demonstration

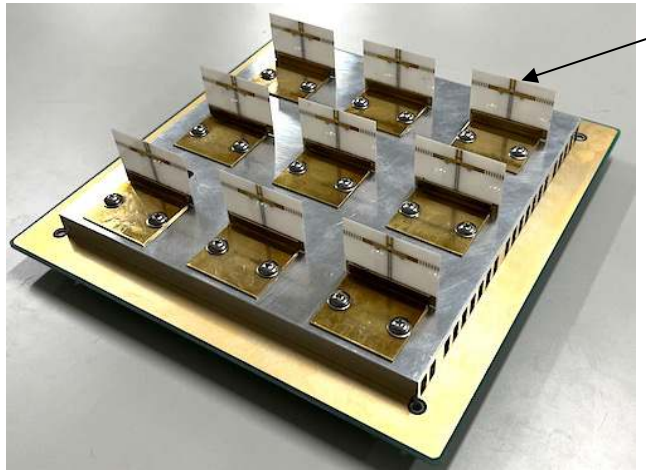

High-power rectenna with AlN antenna

Prototyped rectenna array

Configuration of 10 W rectenna with aluminum nitride antenna

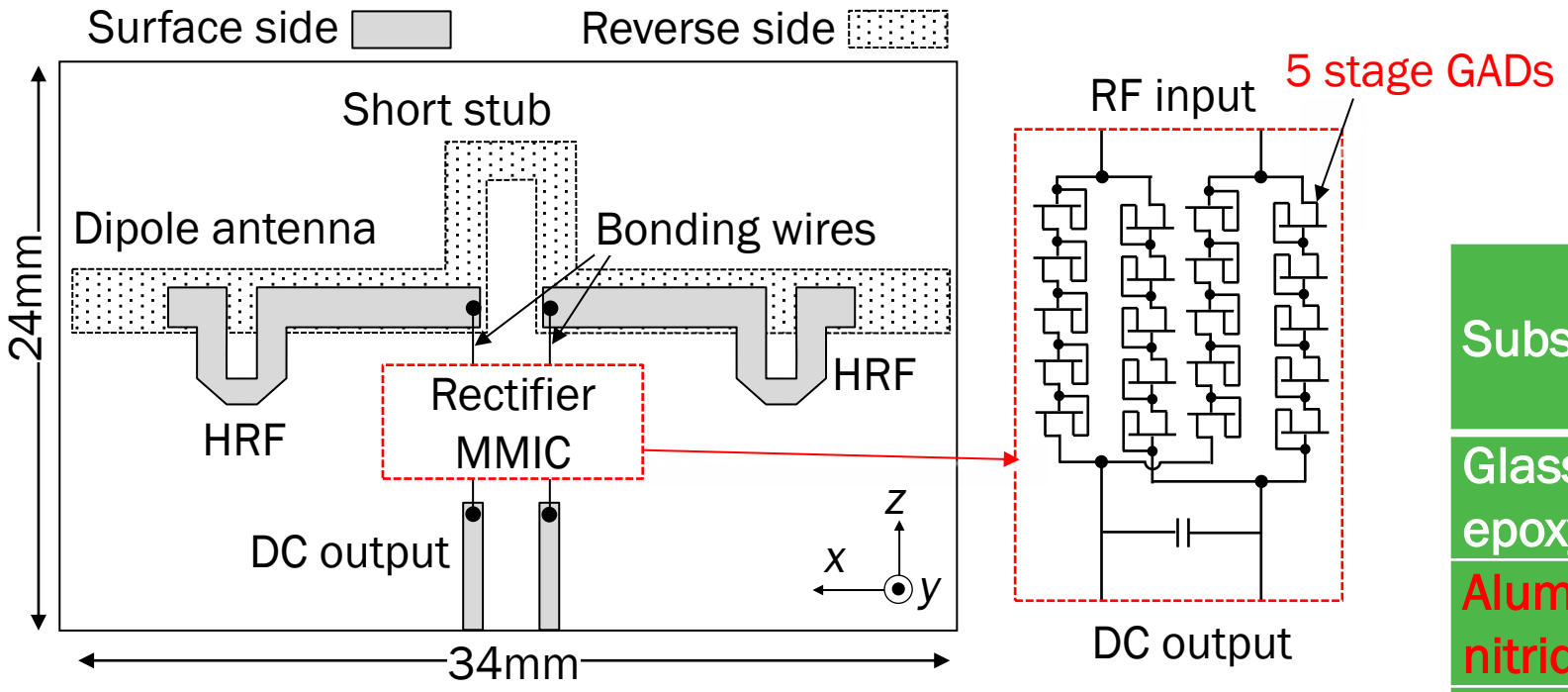

HRF: Harmonic Reaction Feeder

AlN substrate (thick *t*: 0.4 mm)

Electrical and thermal properties of the substrates

Substrate	Thermal conductivity (W/m·K)	Dielectric constant	tanδ
Glass epoxy [5]	0.3	3.4	0.0015
Aluminium nitride	200	8.8	0.0005
Aluminium	236	-	-

The highly functional antenna on the AlN substrate is expected to have both high thermal dissipation and highly efficient rectification of the rectifier MMIC

Photograph of the rectenna with aluminum nitride antenna

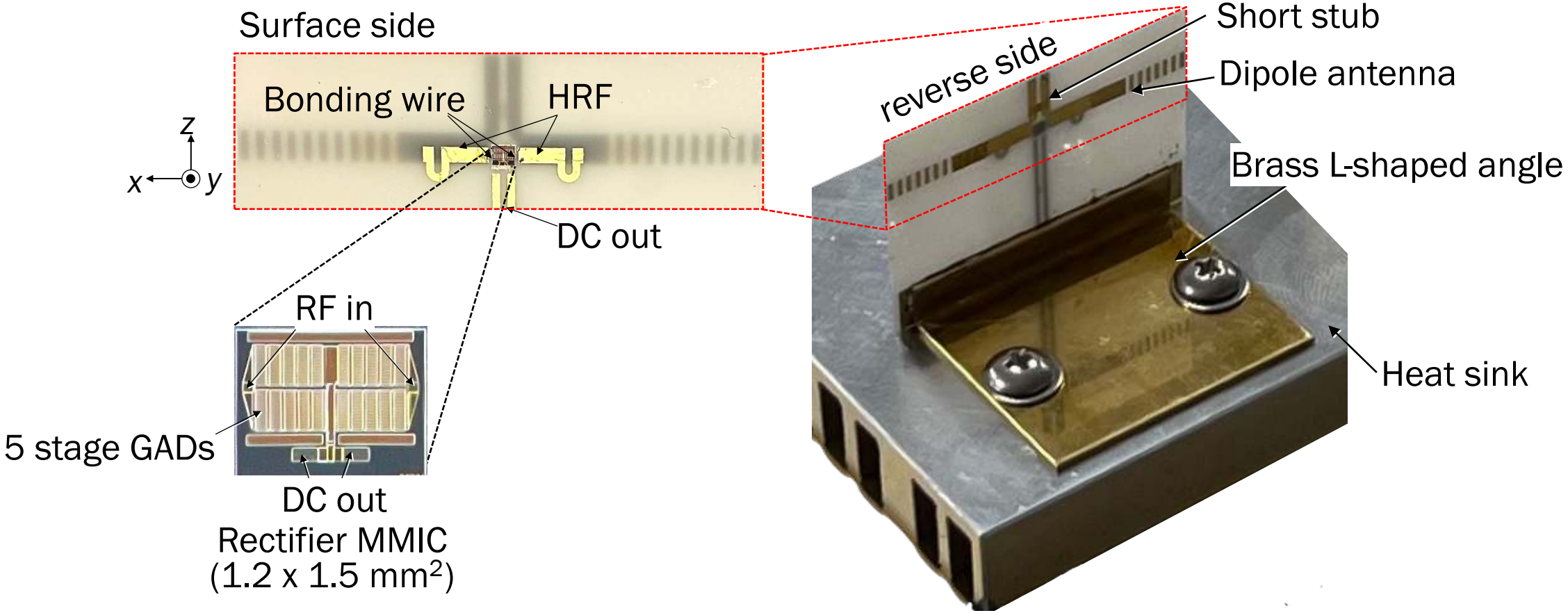

The heat of the MMIC is dissipated from the AlN substrate to the heat sink through the L-shaped angle.

Thermal design

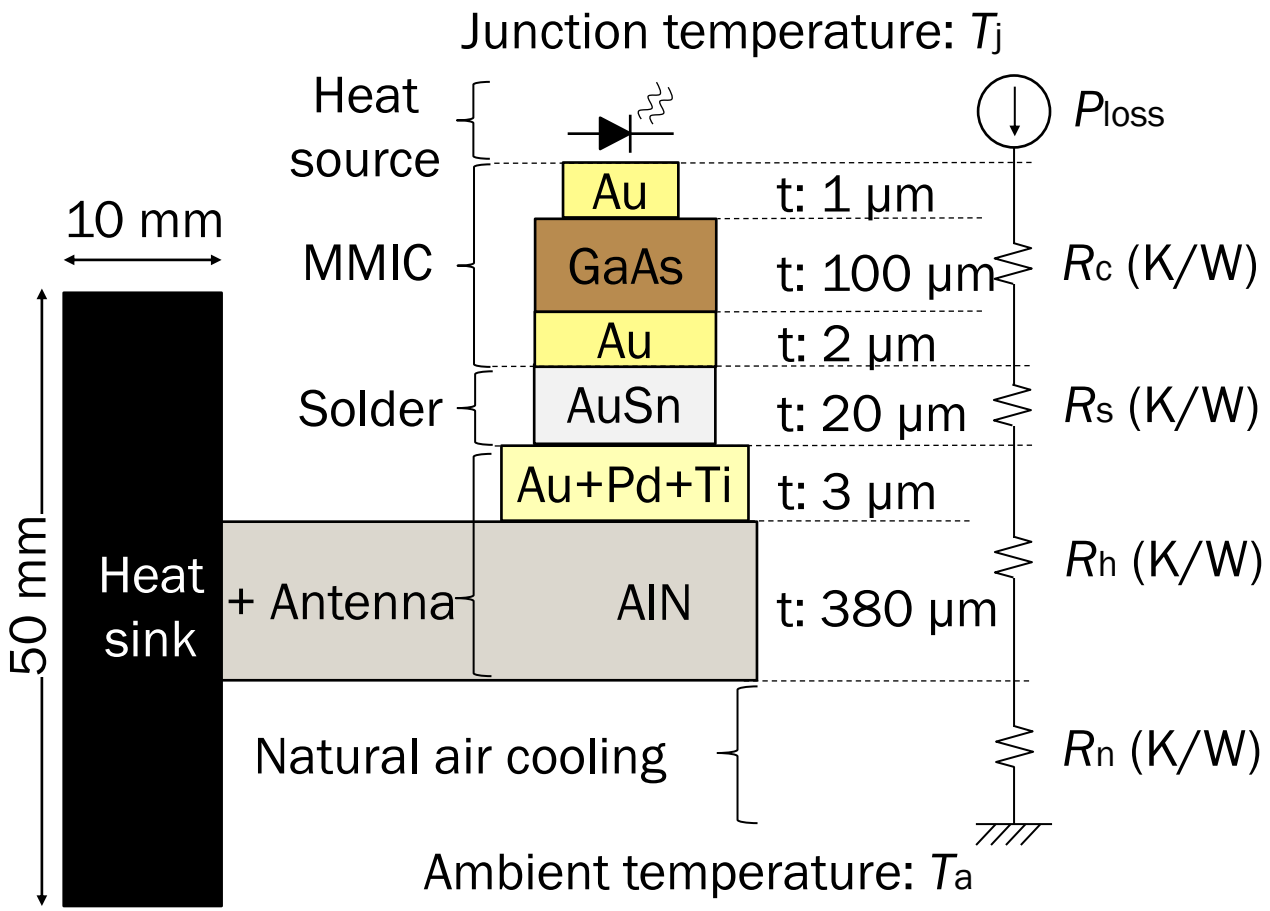

Component		MMIC on AlN substrate w/o heat sink	MMIC on AlN substrate w/ heat sink
		Thermal resistance (K/W)	
Chip	R_c	13.4	
Solder	R_s	0.2	
Antenna+ Heat sink	R_h	6.15	9.26
Natural air cooling	R_n	39.4	6.32
Total thermal resistance	R_t	59.2	29.2
		Calculate T_j	
GAD's loss	P_{loss}	1.3 W	
Ambient temperature	T_a	30 degree	
Junction temperature	T_j	107 degree	68 degree

Calculation of thermal resistance by FEM

Junction temperature T_j of 68 deg. is derated lower than 46% of the typical maximum T_j of 150deg.

Antenna admittance design

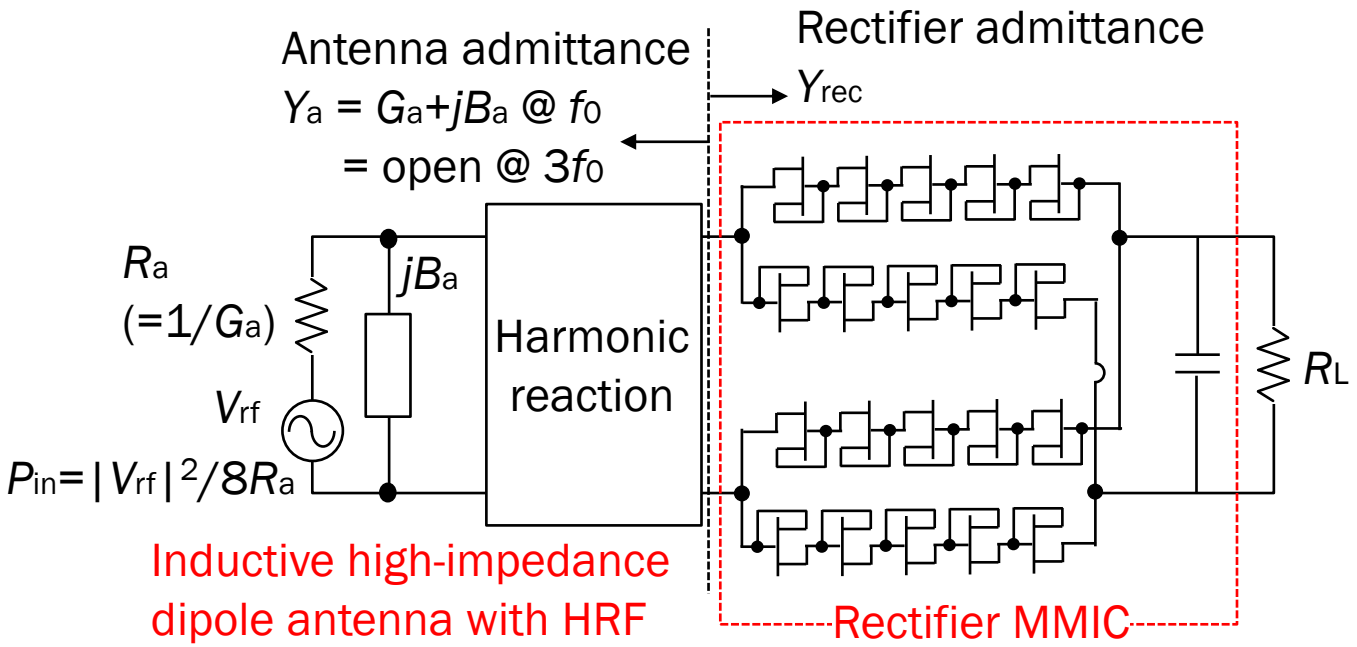

Antenna admittance design

(1) Extraction of the GAD's SPICE parameters.

(2) Optimization of the antenna admittance Y_a, and DC load R_L for highly efficient rectification of the rectifier MMIC.

➔Antenna admittance Y_a = 3.9+j8.6 mS,
and rectification efficiency η_{rec}=87% at P_{in} of 10 W with this antenna.

SPICE parameters of the GaAs GAD (gate width W_g = 2.08 mm)

Parameters	Symbol	Unit	Value
Saturation current	I_s	nA	24.4
Series resistance	R_s	W	0.87
Emission coefficient	N	-	1.2
Zero biased junction capacitance	C_{j0}	fF	728
Parasitic capacitance	C_d	fF	433
Junction potential	V_f	V	0.8
Breakdown voltage (I_d = 0.1 mA/mm)	V_{br}	V	13.9
Maximum dc current	I_{max}	mA	490

Antenna layout and characteristics

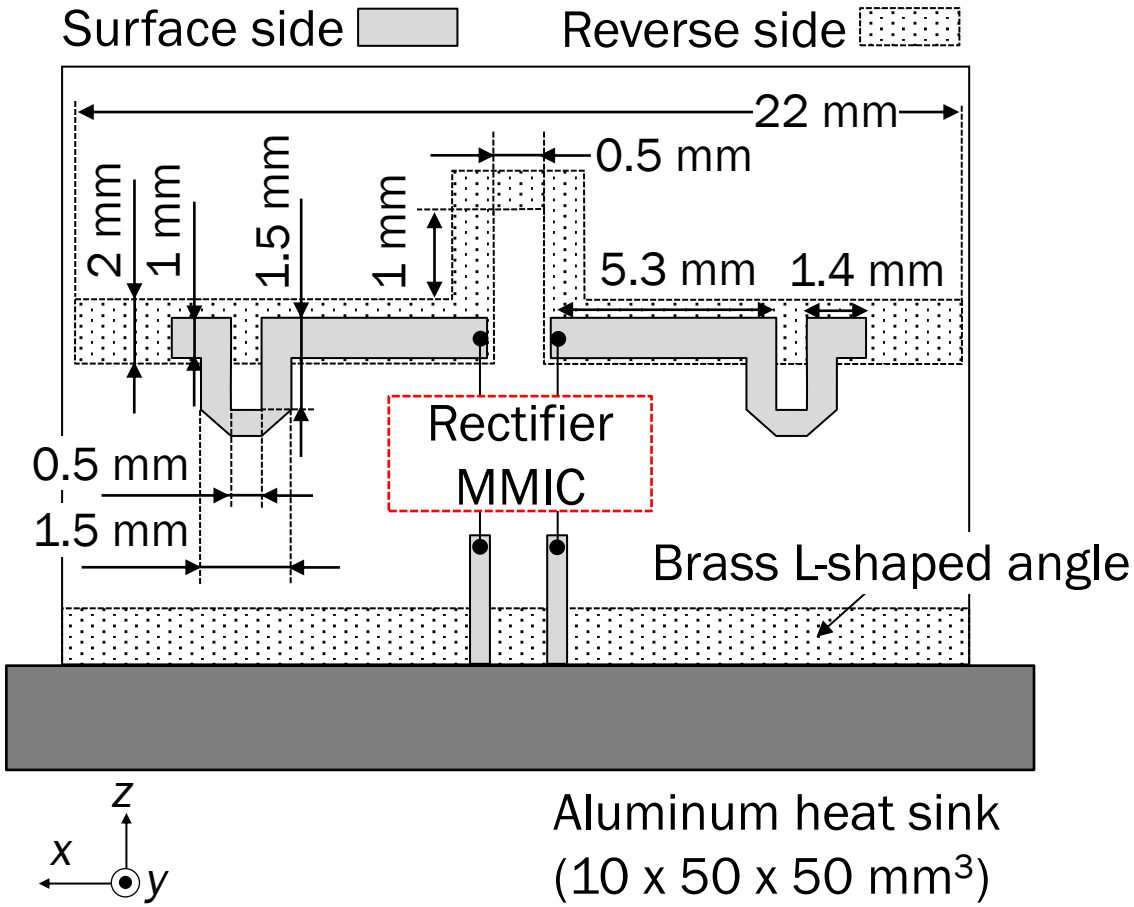

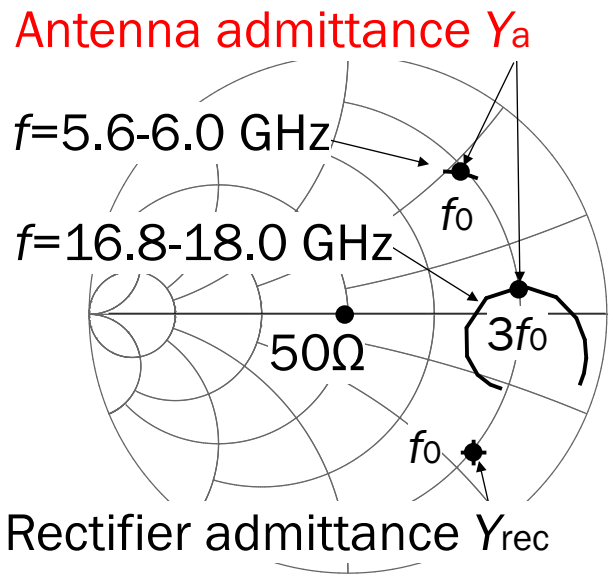

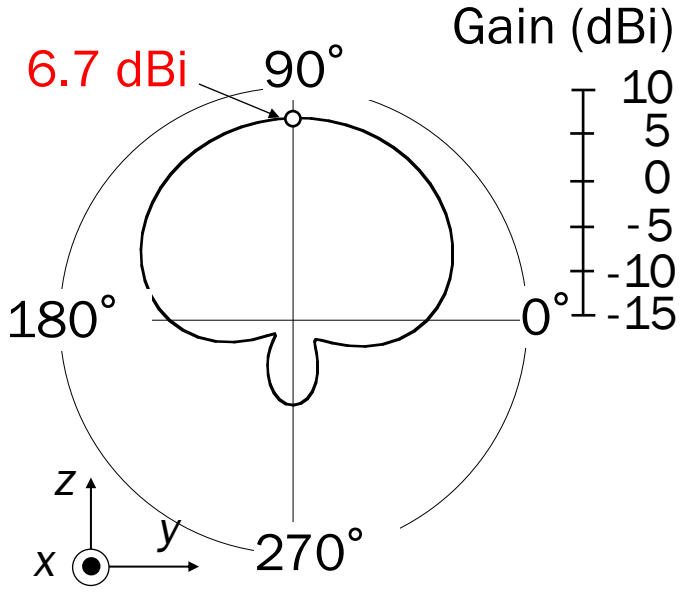

Operation frequency f_0: 5.8 GHz

Radiation efficiency: 99.2 %

Antenna admittance Y_a: 4.3 - j9.2 mS

The antenna has circuit functionalities and high radiation efficiency.

Measured rectification efficiency of the rectenna

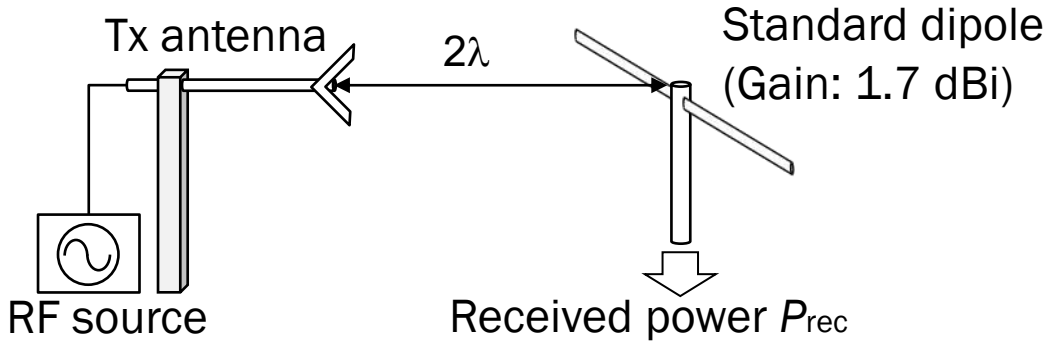

P_{in} (dBm) = G_{ant} (dBi) – 1.7 dBi + P_{rec} (dBm)

Measurement system for input power P_{in}

Rectenna's antenna gain G_{ant}: 6.7 dBi

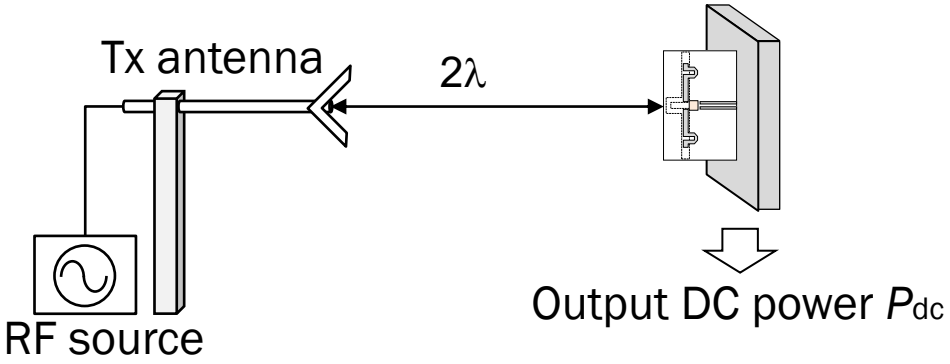

Rectification efficiency η_{rec} = P_{dc} (W) / P_{in} (W)

Measurement system for rectification efficiency

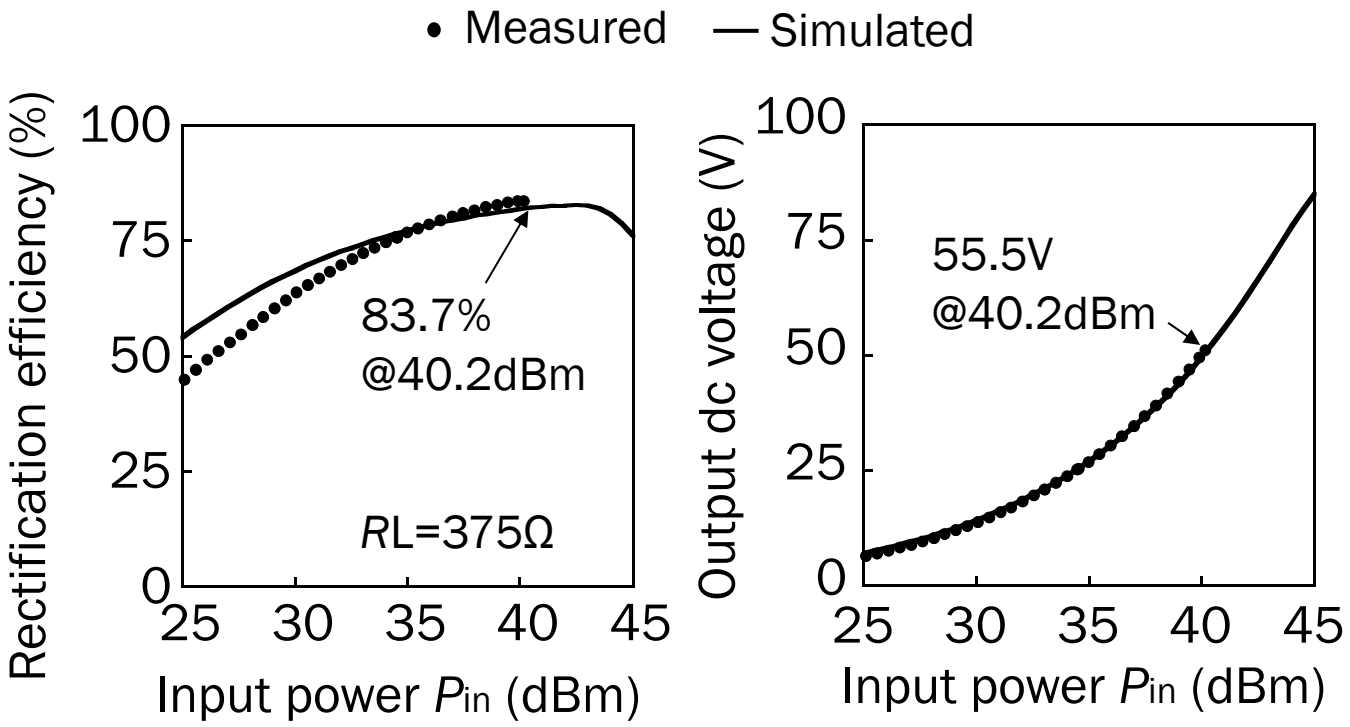

The measured rectification efficiency of the rectifier is 83.7 % at P_{in} of 40.2 dBm

Measured junction temperature of MMIC

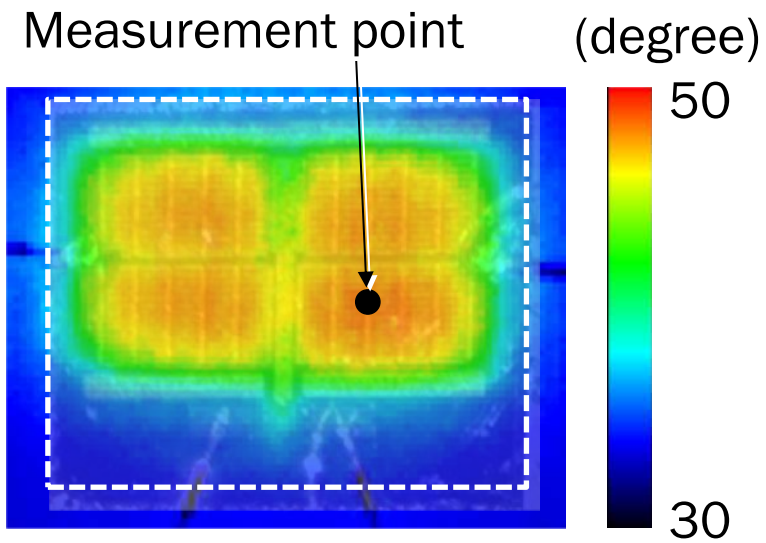

Surface temperature of the rectifier MMIC (P_c = 1.7 W)

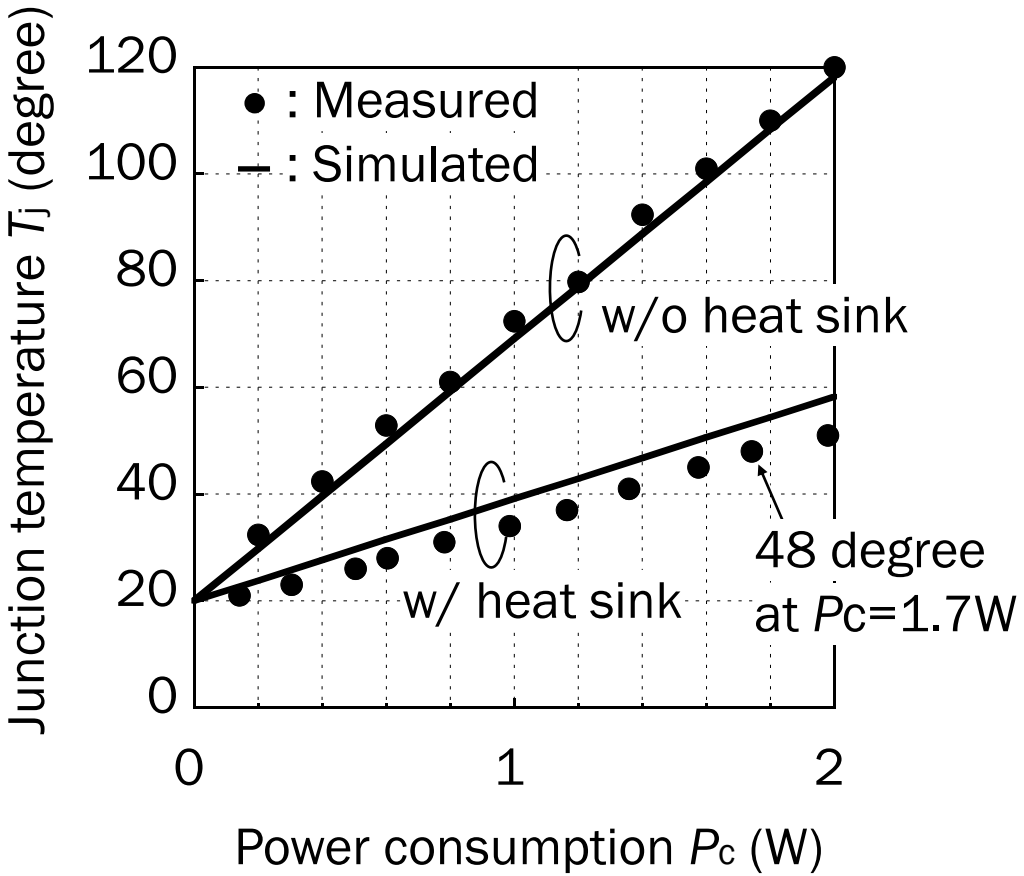

The measured T_j of 48 degrees is derated lower than 32% of the typical maximum T_j of 150deg.

Prototyped rectenna array and demonstrating a drone flight system with it

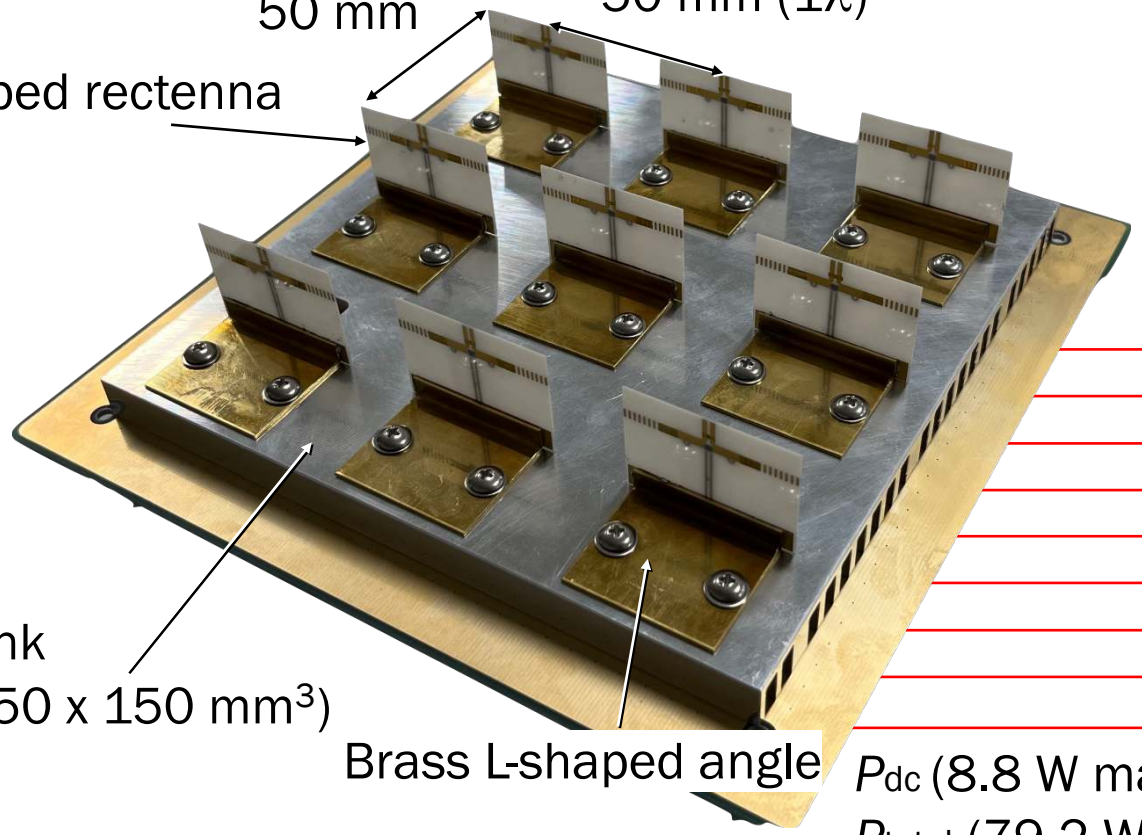

Conversion Eff.
85% max.

Power control unit

P_{dc} (8.8 W max.)
P_{total} (79.2 W max.)

Drone without a battery
(Size: 336 x 370 x 56 mm)

P_{drone} = 67 W max.
V_{drone} = 7V const.

Drone flight demonstration

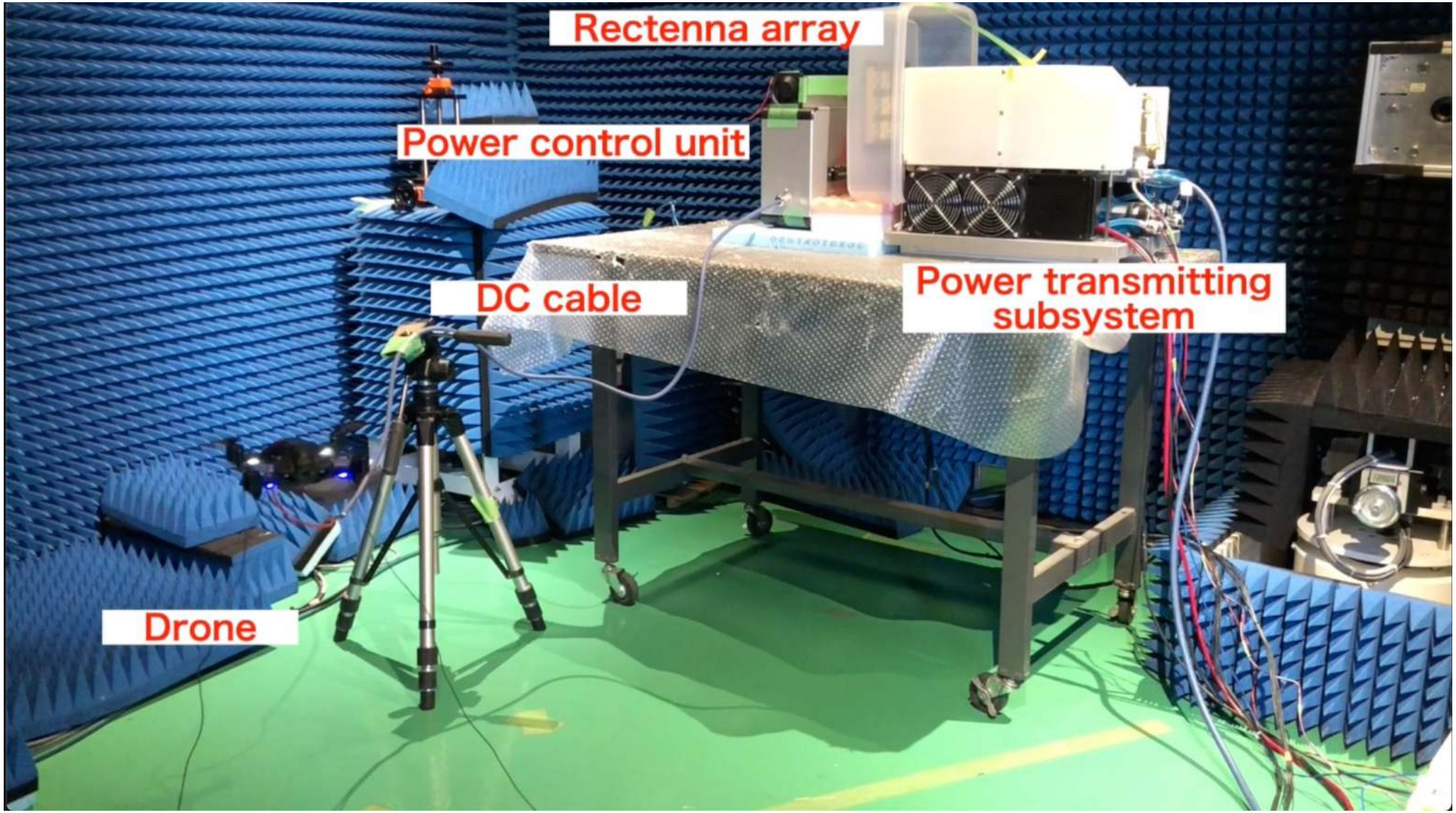

The drone flew continuously for 10 minutes with dc power from the rectenna array.

The measured output power of the prototyped rectenna array

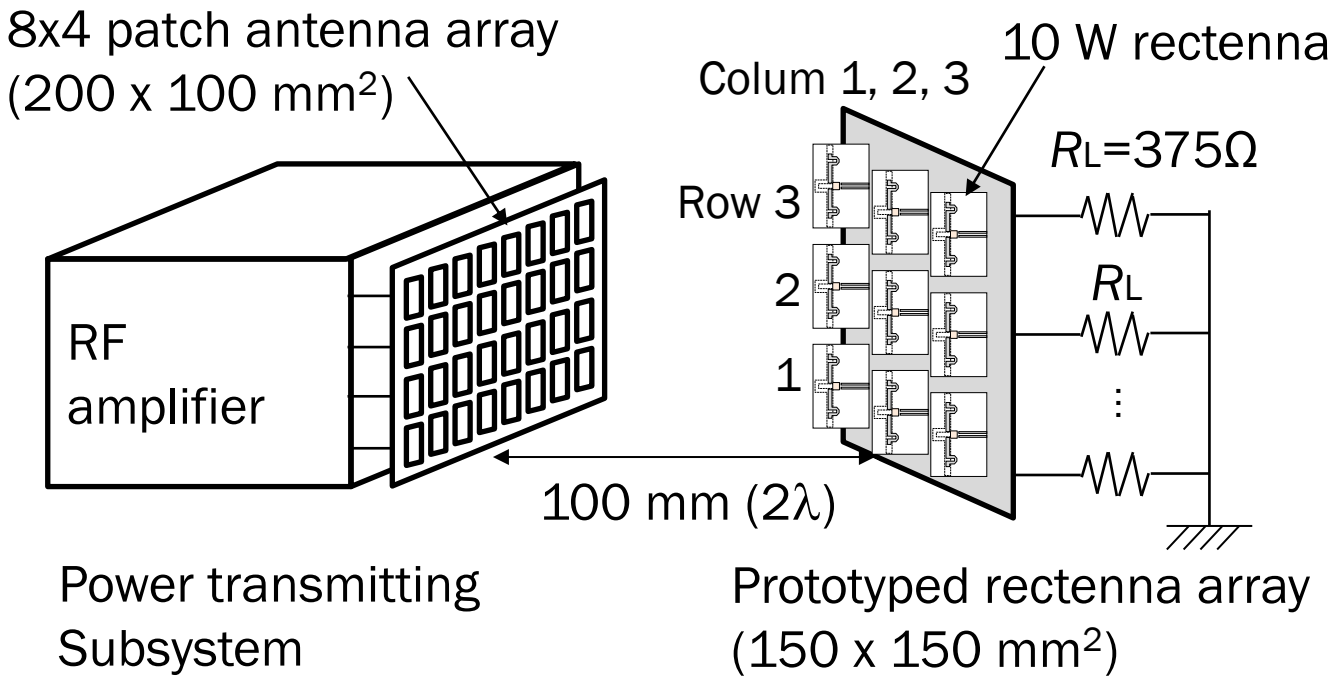

Rectenna output power P_{dc} (W)		Column 1	Column 2	Column 3	Rectenna array's output power P_{total} (W)
Row	3	3.48	5.22	3.45	43.4
	2	5.64	5.86	4.84	
	1	3.84	6.64	4.41	

The patch antenna array is formed the beam pattern that evenly distributes the received power across each rectenna.

Transfer RF power P_{tx}=200W → Estimated input power P_{in} = 53W → Measured output power P_{total} = 43.4W

The measured output power P_{total} is 43.4 W on the rectenna array's area of 150 x 150 mm².

Conclusion

- 5.8 GHz bands high power rectenna array is designed and prototyped.
- We designed and prototyped a high-power rectenna with a gated anode diode (GAD), diode-on antenna (DoA) topology, and an aluminum nitride antenna.
  - The simulated radiation efficiency is 99.2 % and an antenna gain is 6.7 dBi in the antenna.
  - The measured rectification efficiency of the rectifier is 83.7 % at an input power of 40.2 dBm
  - The measured Junction temperature T_j of the rectifier MMIC on the AlN substrate is 48 degrees, derating lower than 32% of the typical maximum T_j of 150 deg.
- We prototyped the rectenna array and demonstrated a drone flight with it.
- The measured output power of the rectenna array is 43.4 W on the rectenna array's area of 150 x 150 mm^2.