Tu03D_2

A Differential Amplifier with Enhanced Linearity of Average Power Region Using Dynamic Cross-coupled Capacitor for 5G NR-U

S. Hwang[1], J. Jeon[2], S. Bae[1], B. Yoon[1], S. Kang[1], J. Kim[1]

[1]Department of Electrical and Electronic Engineering, Hanyang University, Ansan, Republic of Korea

[2]Department of Electronic Engineering, Gangneung-Wonju National University, Republic of Korea

Contents

Introduction

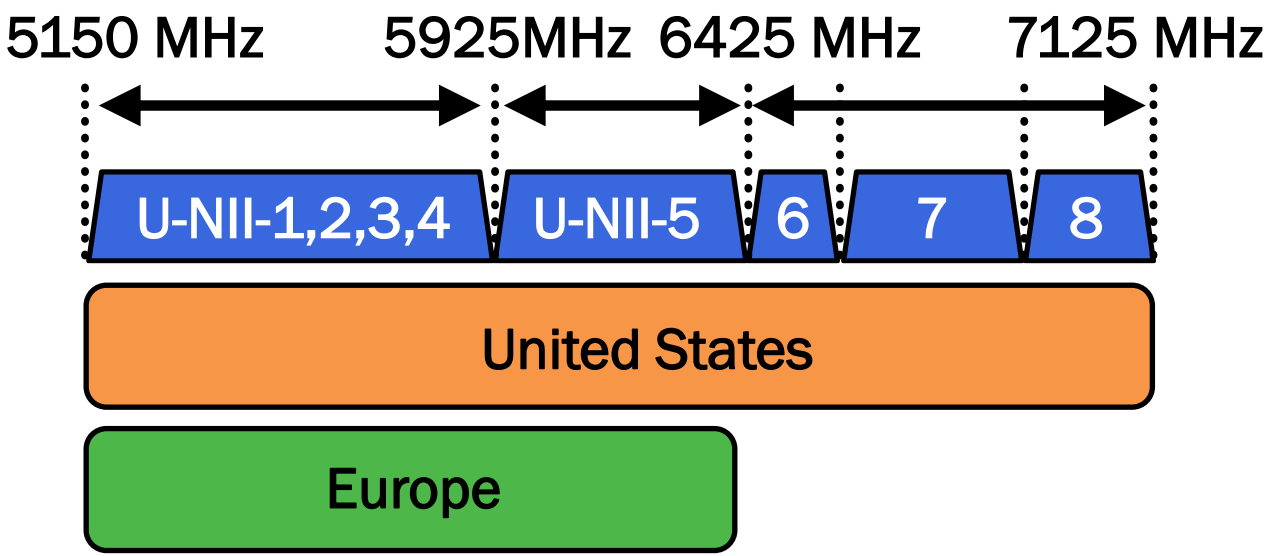

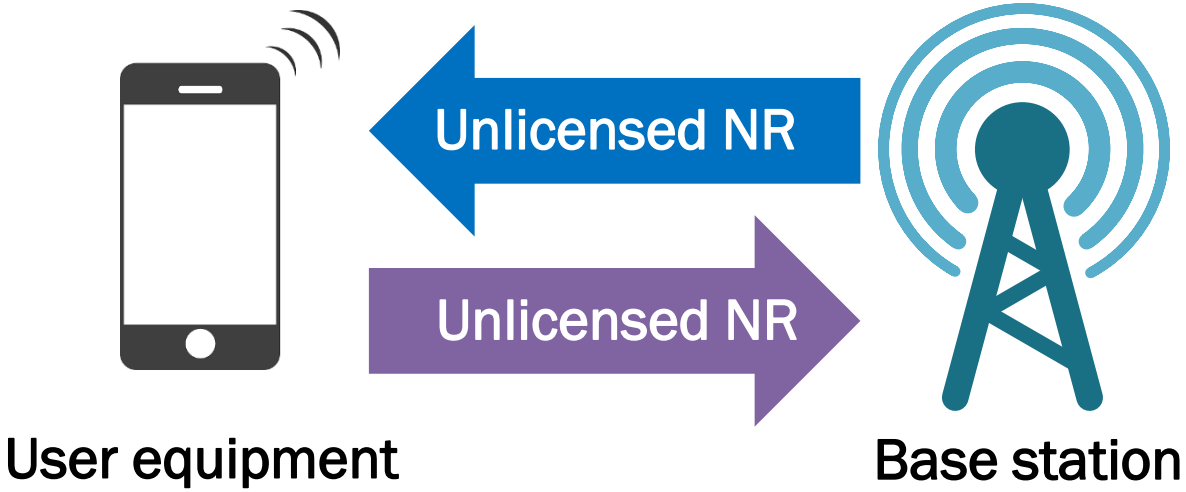

- Multiple scenario for NR-U
- Carrier aggregation or dual connectivity with Licensed NR or LTE

Motivation

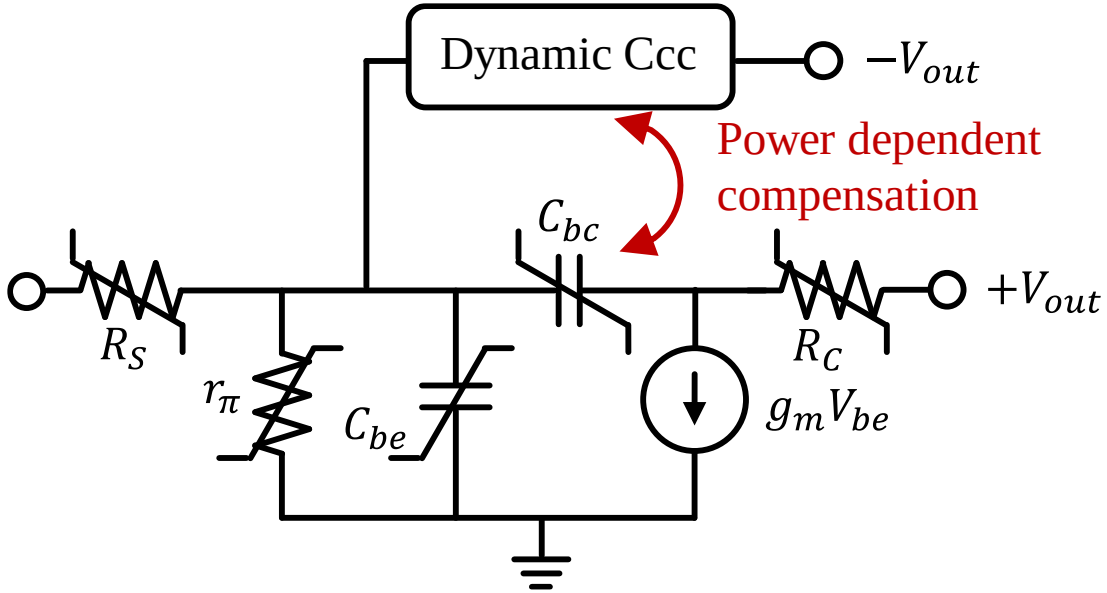
Dynamic Ccc
$-V_{out}$
Power dependent compensation
C_{bc}
$+V_{out}$
R_S
r_π
C_{be}
R_C
$g_m V_{be}$

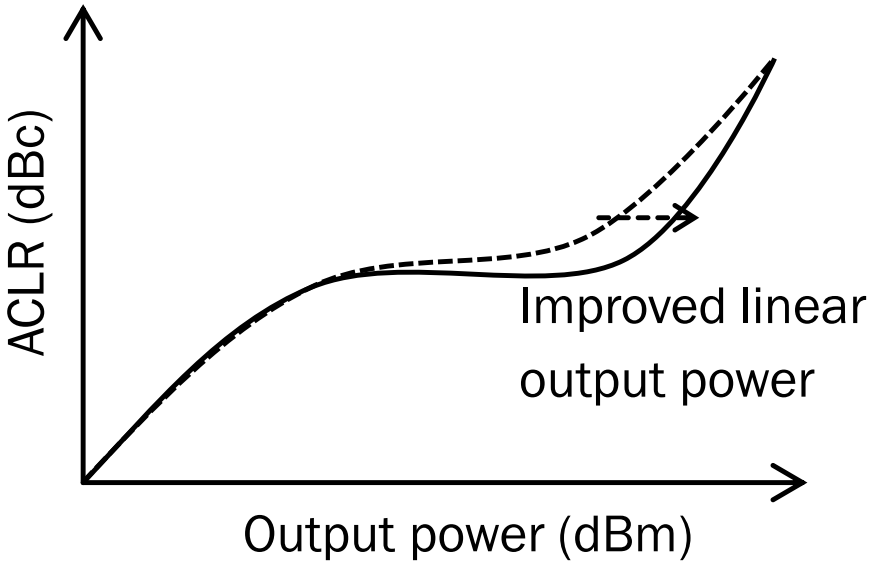
ACLR (dBc)
Improved linear output power
Output power (dBm)

Design description

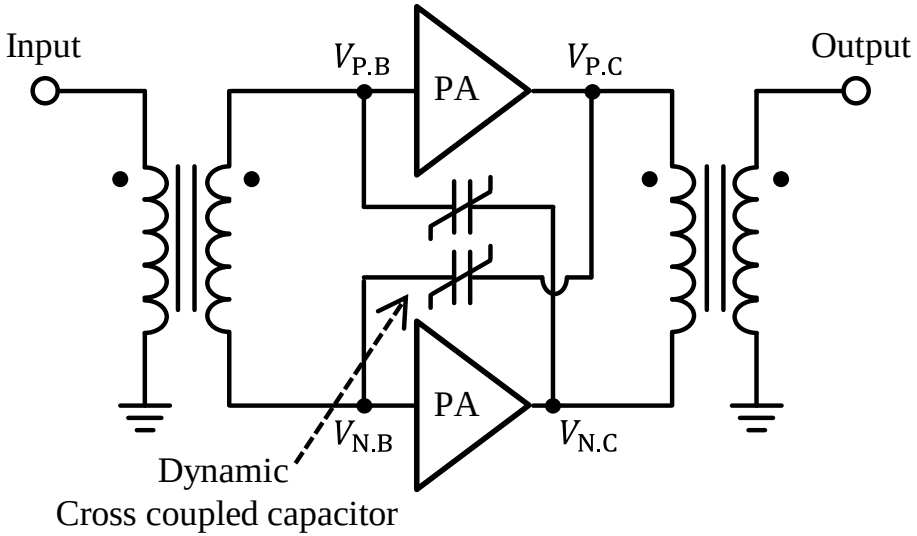

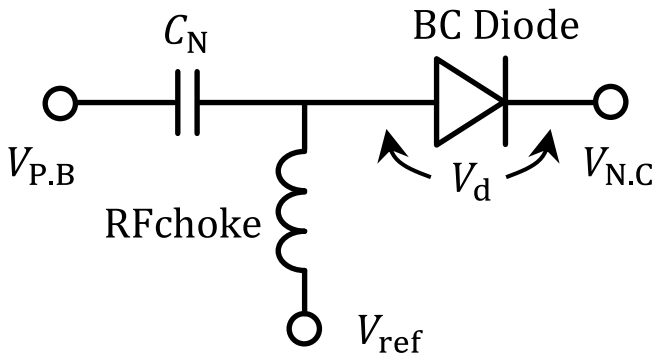

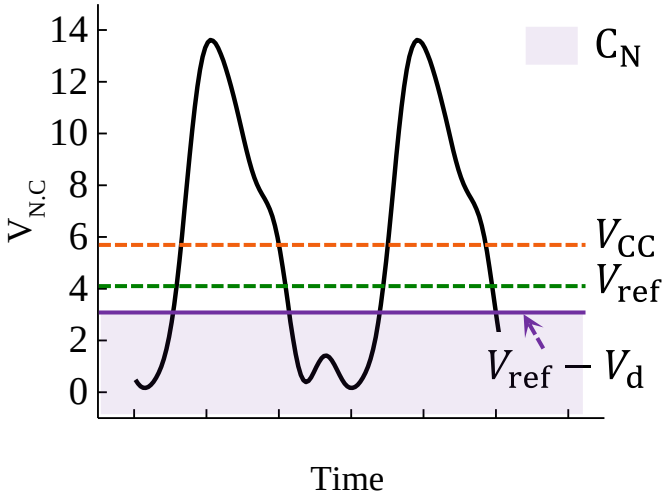

Design description

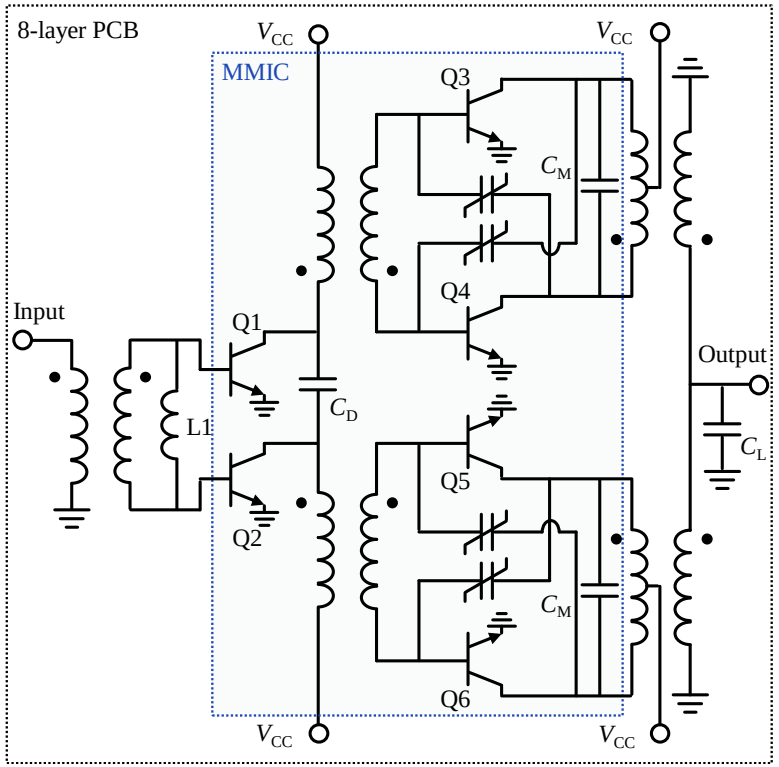

Design description

TF	L_P (nH)	L_S (nH)	Q_P	Q_S	k	n	IL (dB)
Input	1.07	1.69	49	54	0.65	1	0.25
Output (each)	0.4	1.7	38	41	0.63	2.05	0.33

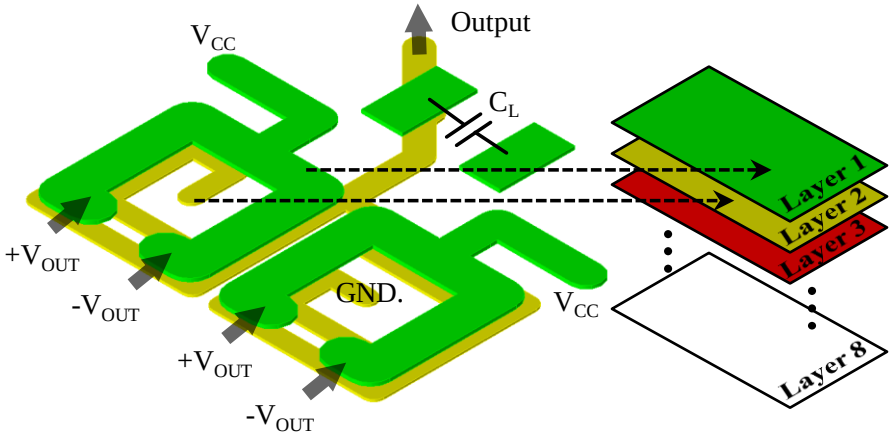

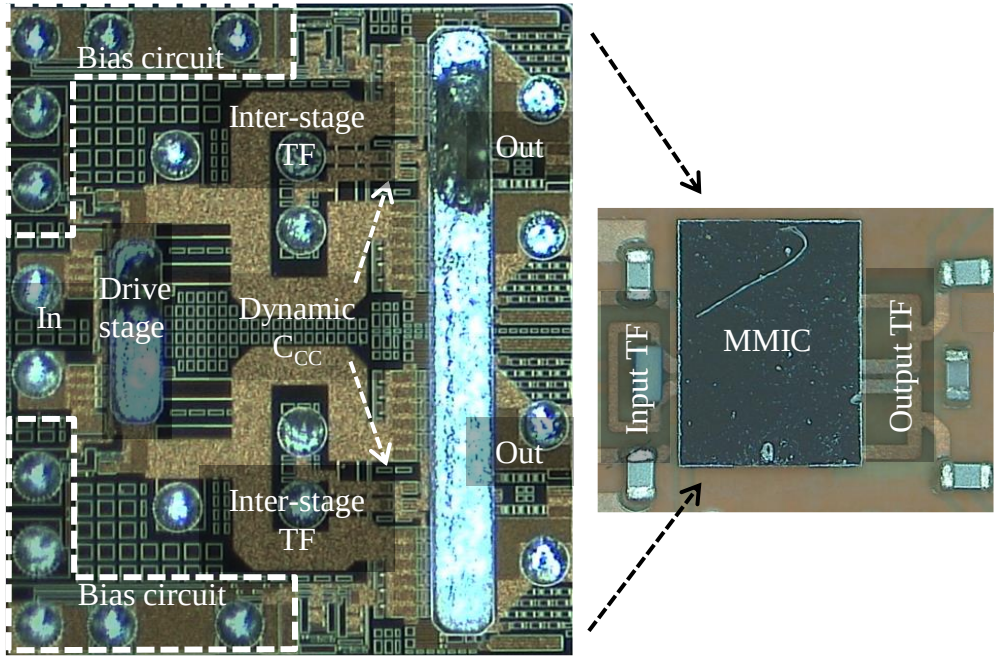

Measurement results

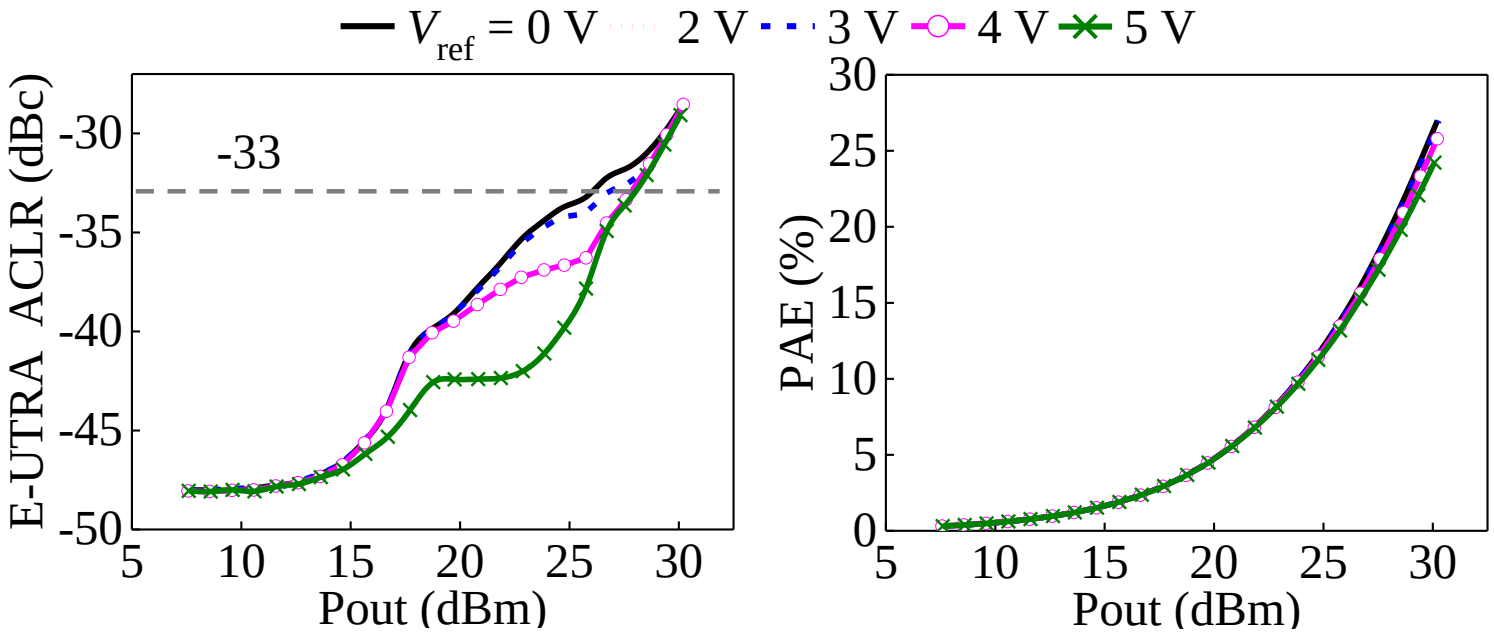

(a) (b)

Measurement results

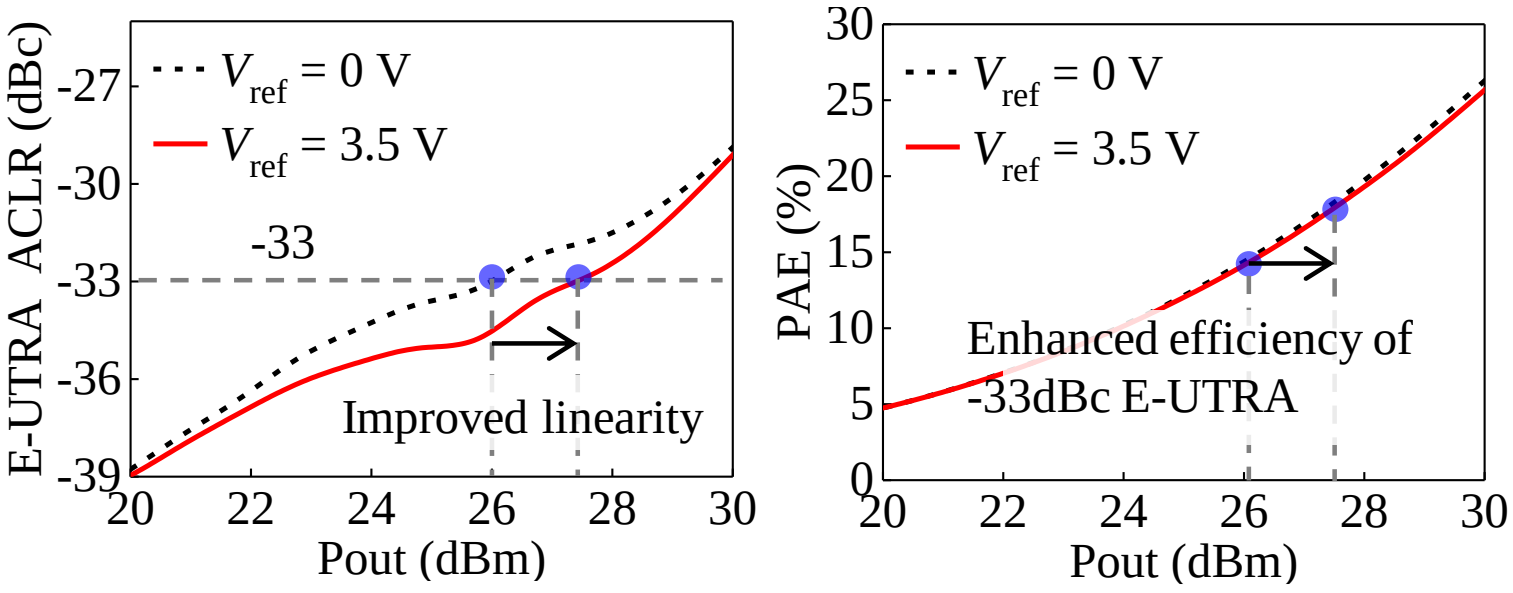

(a) (b)

Measurement results

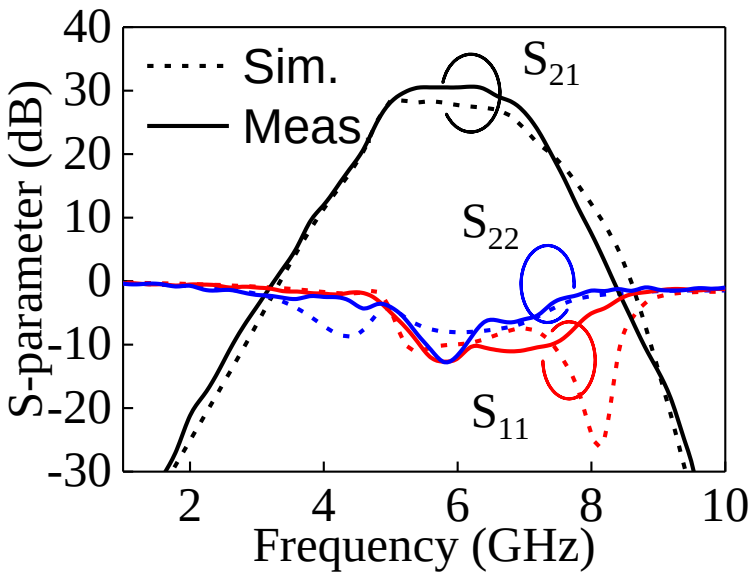

(a)

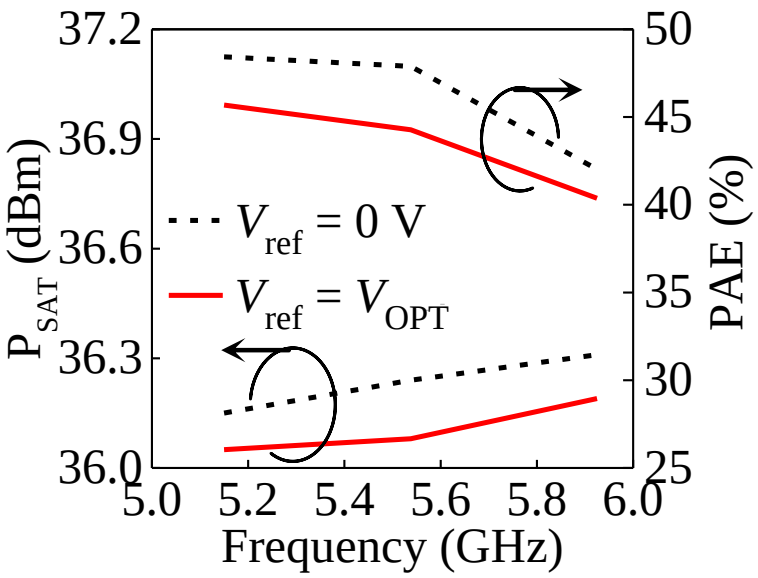

(b)

Measurement results

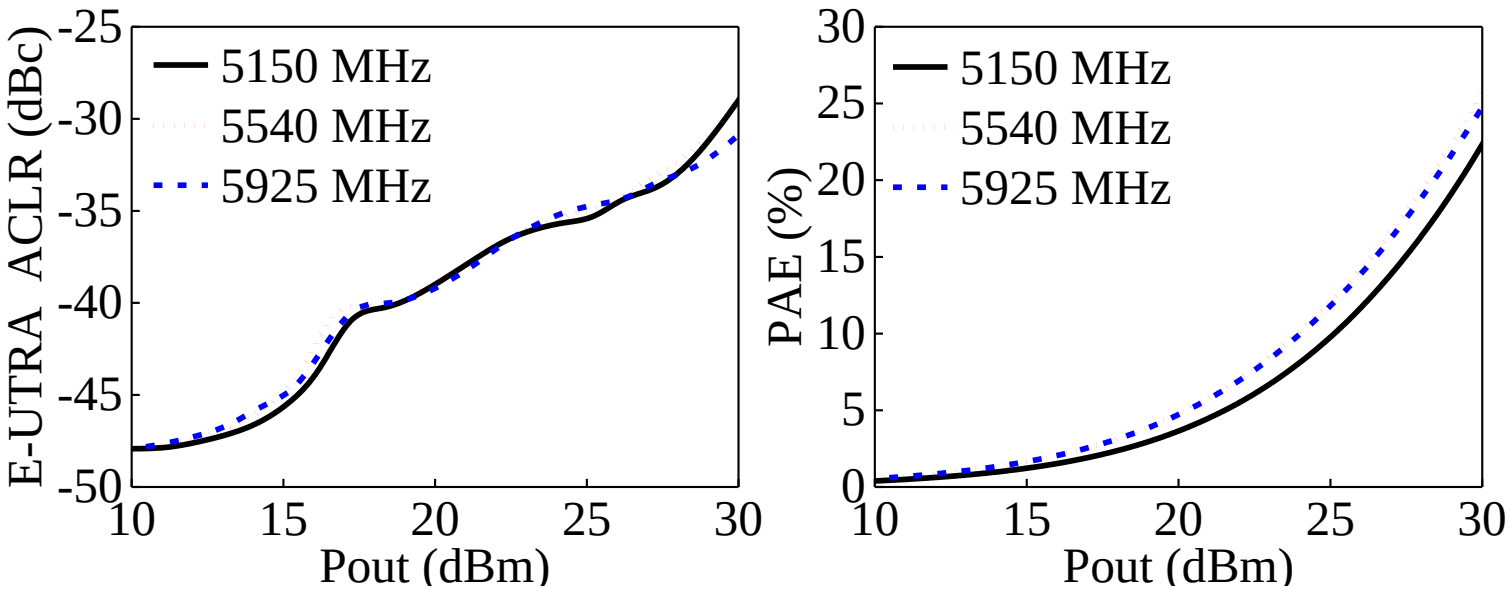

(a) (b)

Performance comparison with the state-of-the-art

Ref.		[4]†	[5]	[6]†	[7]	This work
Freq. (GHz)		5.15–5.95	4.9-5.9	5.2–5.925	5.15–5.85	5.15-5.925
Process		SiGe BiCMOS	GaAs HBT	GaAs HBT	GaAs HBT	GaAs HBT
Supply (V)		5.0	3.4	5.0	3.3	5.5
Gain (dB)		31.8	26.0	32.0	26.6	29.5
P_{SAT} (dBm)		33.0	29.0	34.0	30.5	36.05
PAE_{peak} (%)		35.2	28-30	-	40.4	40.4
Linearity	Signal	802.11ax MCS11	802.11g 64QAM	802.11ac MCS9	LTE	5G NR
	P_{OUT} (dBm)	21.4	18	24.0	24.1	27.18
	PAE (%)	8.5	5	-	19.3	16.8

† dynamic EVM measurement

Conclusion

- The highest P_{SAT} and PAE with improved linearity in 5 GHz band based on InGaP/GaAs HBT process for mobile applications.
- The proposed dynamic C_{CC} compensates the nonlinearity factor of C_{BC} of the HBT power cell in large signal, in which the PA has a high P_{OUT} meeting the linearity for 5G NR-U.