WE1C-1

A 2W 9.5-16.5 GHz GaN Power Amplifier With 30% PAE Using Transformer-Based Output Matching Network

Xiao Sun[1], Xu Zhu[2], Yong Wang[1], Pei-Ling Chi[3], Tao Yang[1]

[1]University of Electronic Science and Technology of China, China

[2]Northern Institute of Electronic Equipment of China, China

[3]National Chiao Tung University, Taiwan , China

Outline

- Introduction
- Design approach
- Measured performances
- Conclusion

Introduction

- Power Amplifier (PA)
  - Important part in communication systems
  - Output power, efficiency, bandwidth, linearity
  - Critical trade-off: bandwidth vs efficiency
- Large Demands for PAs
  - Broadband or multiband operation
  - High efficiency

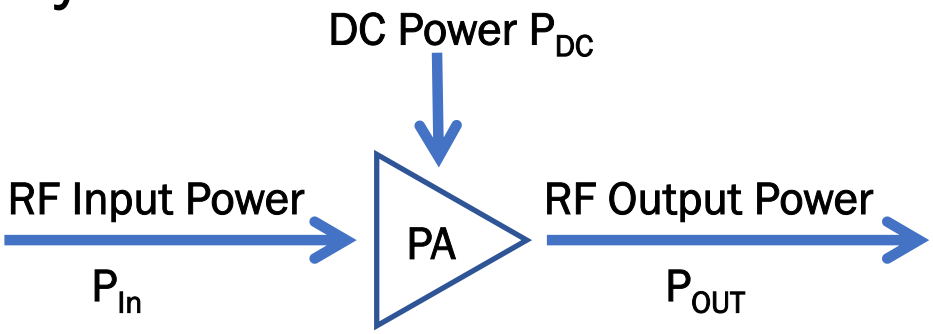

Design approach

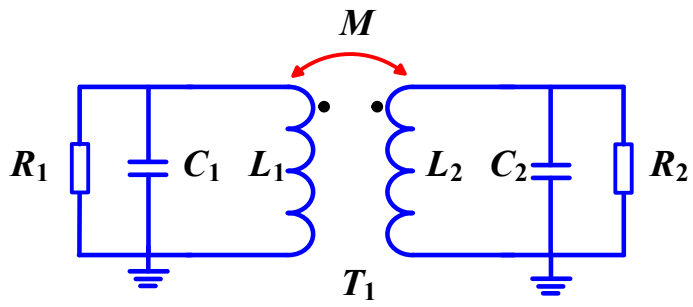

- Transformer structure can cover multioctave bandwidth
- Large coupling coefficient
- Require multiple metal layers
- Only two metal layers in GaN technology

Design approach

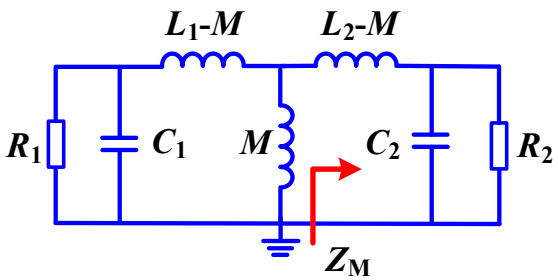

Add T_2

Extend bandwidth

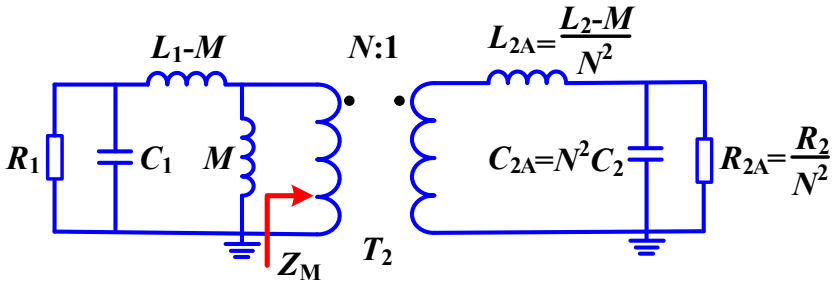

$$L_{2A} = \frac{L_2 - M}{N^2}, \quad C_{2A} = N^2 C_2, \quad R_{2A} = \frac{R_2}{N^2}$$

$$BW = \frac{\omega_0}{2\pi}\left(\sqrt{\frac{1}{1-k}} - \sqrt{\frac{1}{1+k}}\right), \quad k \le min\left(\sqrt{\frac{1}{N_1}}, \sqrt{N_1}\right)$$

$$N_1 = \frac{R_2}{R_1} < \frac{R_{2A}}{R_1}, \quad N_2 = \frac{1}{N^2} = \frac{R_{2A}}{R_2} < \frac{R_{2A}}{R_1}$$

BW is limited by impedance ratio N_1

$R_1 \rightarrow R_2 \rightarrow R_{2A} = 50\ \Omega$

Impedance ratio decrease

The bandwidth increase

Design approach

Norton transformation

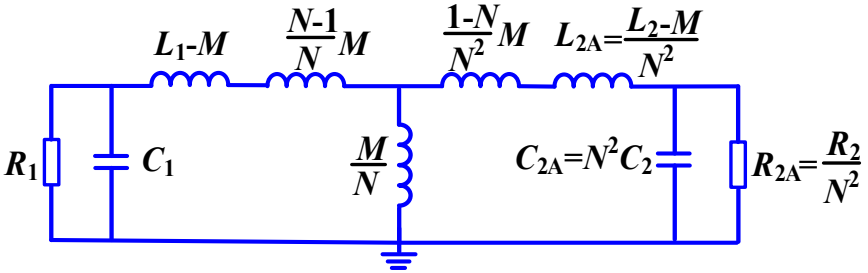

Final network

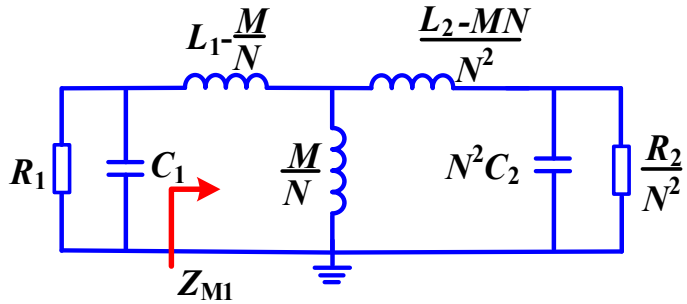

- Exhibit the same circuit form
- A much wider matching bandwidth

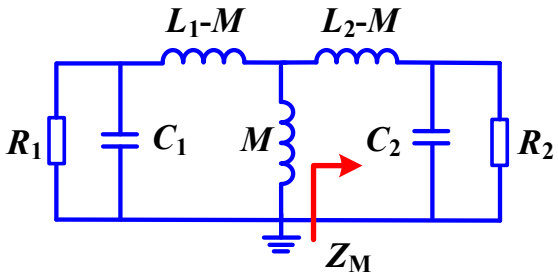

Design approach

Matching performance

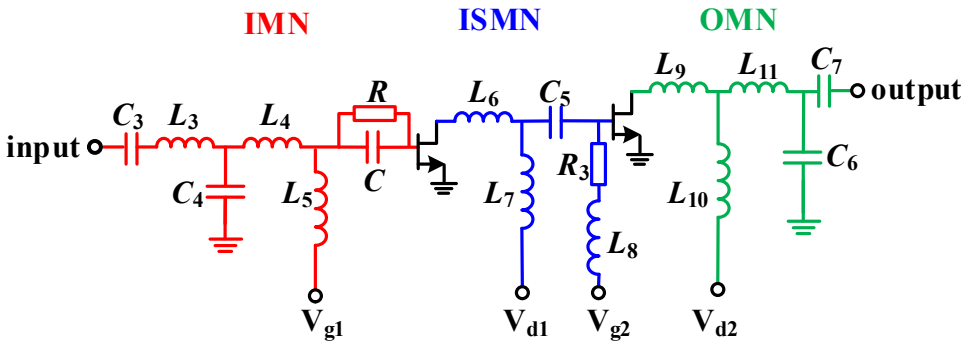

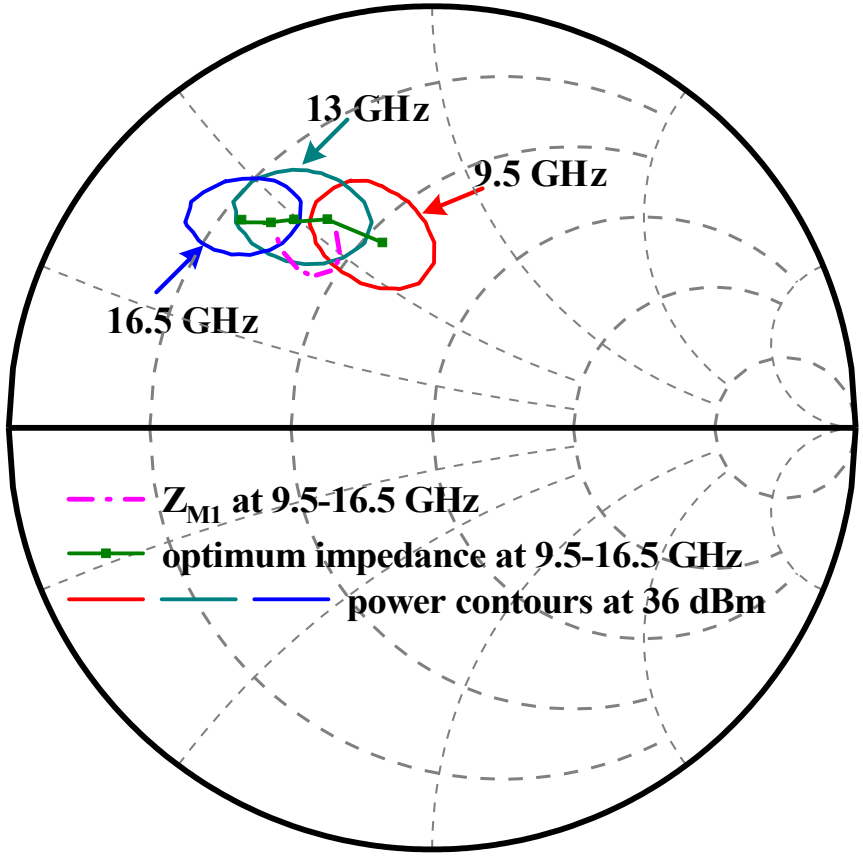

Good performance has been achieved with the proposed circuit

Design approach

- Final MMIC

Size: 2.9 mm × 1.2 mm

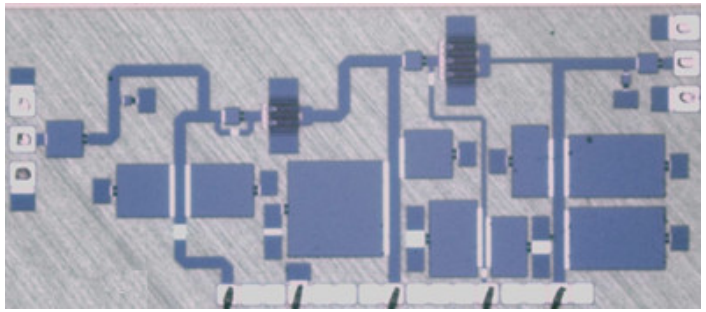

- Configuration:
  - Transformer-based output matching network
  - 2 stages amplification
  - Transistor size:
    - Power stage: 6×125 μm
    - Driver stage: 4×125 μm
  - Frequency band: 9.5-16.5 GHz
  - Bare die/50 Ω fully matched
  - Drain biasing: 23V

Measured performances

- Small signal

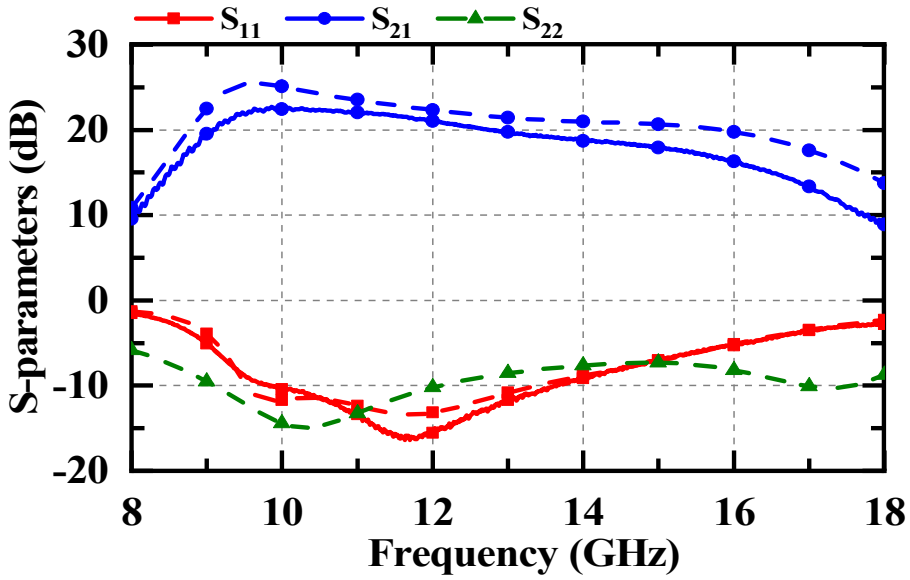

- Measured : Solid Traces
- Modeled: Dash Traces
- Small gain is around 20 dB
- Input return loss < 6 dB
- Output return loss < 10 dB

Measured performances

- Large signal vs Frequency

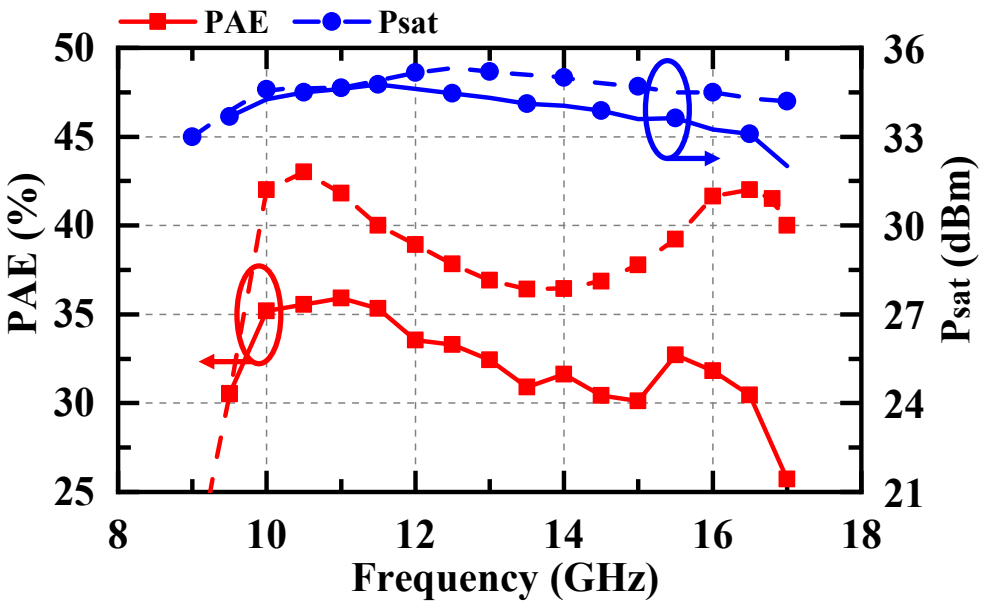

- Measured : Solid Traces
- Modeled: Dash Traces
- Peak power of 34.8 dBm and 35.4% PAE at 11.5 GHz
- Greater than 30% PAE maintained over full 9.5-16.5 GHz bandwidth

Measured performances

- Large signal vs Pin

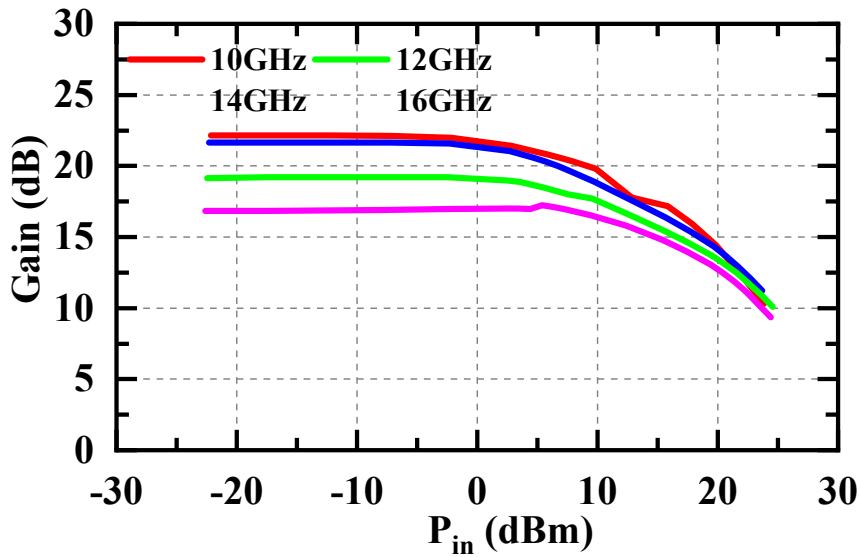

Gain vs Pin

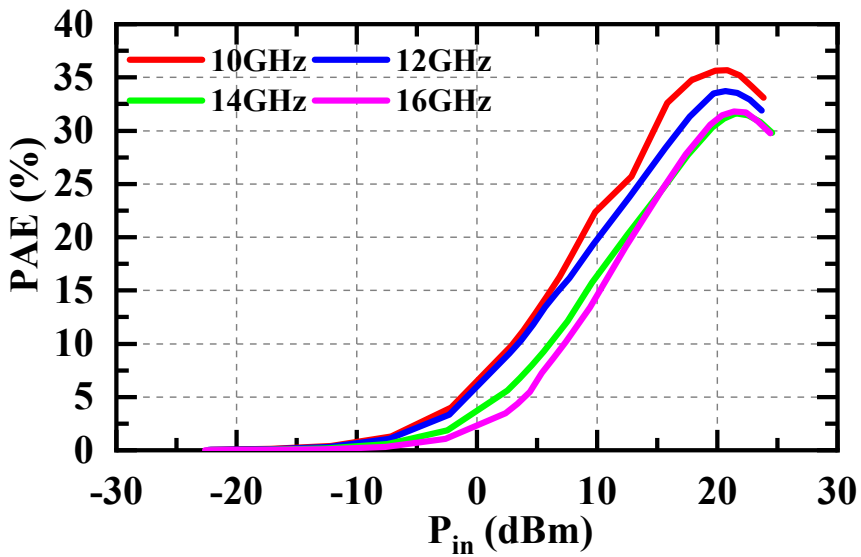

PAE vs Pin

Comparison

Ref.	Tech	Freq. (GHz)	Gain (dB)	P_{sat} (dBm)	PAE (%)	Area (mm^2)
[12]	0.25 μm GaN	9-10 13.5-16	10-12	36.5-37.2 35-36.4	31-36.5 30-35.7	3.78
[13]	0.25 μm GaN	6-10.5 10.5-18	17-27 15-22	34-36 34-38.5	15-34	5.4
[14]	0.25 μm GaN	7-17	13.1-18.6	35.7-37.5	10.2-12.3	11.15
[15]	0.25 μm GaN	10.5-15.5	15-21.2	37-39.8	35-42.2	6.5
This work	0.25 μm GaN	9.5-16.5	15-22.4	33.1-34.7	30.1-35.9	3.48

- The proposed PA achieves a wider bandwidth with high PAE and small size

Conclusion

- A transformer-based output matching network
- Broadband power amplifier
- High efficiency and small size
- Apply in the electronic warfare systems and radar systems

Thank You !